Ref. Ares(2021)7007286 - 15/11/2021

PROJECT DELIVERABLE REPORT

Introducing advanced ICT
and Mass Evacuation Vessel design
to ship evacuation and rescue systems

PALAEMON MASS EVACUATION VESSEL

D4.2 Design and analysis of MEV-I and Structural drawings

A holistic passenger ship evacuation and rescue ecosystem
MG-2-2-2018
Marine Accident Response

Document Information

Grant Agreement Number	814962	Acronym	PALAEMON
Full Title	A holistic passenger ship evacuation and rescue ecosystem		
Topic	MG-2-2-2018: Marine Accident Response		
Funding scheme	RIA - Research and Innovation Action		
Start Date	1st JUNE 2019	**Duration**	36 months
Project URL	https://www.palaemonproject.eu		
EU Project Officer	Georgios CHARALAMPOUS		
Project Coordinator	AIRBUS DEFENCE AND SPACE SAS		
Deliverable	D4.2 Design and analysis of MEV-I and Structural drawings		
Work Package	WP4 – PALAEMON Mass Evacuation Vessel		
Date of Delivery	**Contractual** M20	**Actual**	M28
Nature	R - Report	**Dissemination Level**	PU-PUBLIC
Lead Beneficiary	ASTANDER		
Responsible Author	Laura Herrera	Email	laura.herrera@astander.es
		Phone	
Reviewer(s):	Konstantinos Louzis		
Keywords			

Authors List

Name	Organization
L. Herrera	ASTANDER
Elias Chatzidouros	ESI
Alexandros Koimtzoglou	NTUA

Revision History

Version	Date	Responsible	Description/Remarks/Reason for changes
0.1	2020/11/15	E. Chatzidouros	MEV-I and MEV demo Design
0.2	2020/12/05	Laura Herrera	Update on launching mechanism
0.3	2021/03/10	E. Chatzidouros	MEV-I naval architecture designs following end user suggestions
0.4	2021/04/12	E. Chatzidouros	New structural calculations for MEV-I
0.5	2021/06/20	Laura Herrera	New structural calculations for MEV-I and MEV demo with new material properties
0.6	2021/10/11	E. Chatzidouros	Fitting and evaluation of weight for Inflatables
07	2021/10/01	E. Chatzidouros	Final draft with comments from internal review

Contents

Abbreviations

AP	After Peak
BL	Base Line
BM_L	Longitudinal Metacentric Radius
BM_T	Transverse Metacentric Radius
CAD	Computer Aided Design
CL	Center Line
FEM	Finite Element Method
FLA	Full Load Arrival
FLD	Full Load Departure
FP	Fore Peak
FSM	Free Surface Moment
FSC	Free Surface moment Correction
GM	Metacentric height
GZ	Righting Arm
ICT	Information Communication Technology
KM_L	Longitudinal Metacentric Height
KM_T	Transverse Metacentric Height
KN	Righting lever measured from BL
LCA	Life Cycle Analysis
LCB	Longitudinal Center of Buoyancy
LCF	Longitudinal Center of Floatation
LCG	Longitudinal Center of Gravity
LER	Liquid Epoxy Resin
LSA	International Life-Saving Appliance Code
MEV	Mass Evacuation Vessel
MTC	Moment to change Trim for 1cm
PCG	Product Classification Group
QFD	Quality Function Deployment
TCB	Transverse Center of Buoyancy
TCF	Transverse Center of Floatation
TCG	Transverse Center of Gravity
TPC	Tonnes per cm Immersion
VCB (or KB)	Vertical Center of Buoyancy
VCF	Vertical Center of Floatation
VCG (or KG)	Vertical Center of Gravity
VCG_{Corr} (or KG_{Corr})	The VCG including the FSC
WSA	Water Surface Area
WPA	Water Plane Area

List of Figures

fully rotated the launching beam and the passengers on-board the MEV, d) the MEVs are lowered to the sea where the inflatables will be inflated.

List of Tables

1 Summary

This deliverable extends and completes the work performed in T4.1, where the initial designs were presented regarding MEV-I. The MEV-I design is assessed both in terms of structural integrity and stability. In particular two MEV designs are assessed:

- MEV-I full scale adapted for the Ship which has been selected as a test bed for the PALAEMON project. This is the HELLENIC SPIRIT of ANEK. The MEV-Is designed to replace the existing Life Boats of the ship with new MEV-I. The design, apart from structural assessment and stability also show the launching mechanism, as well as the ease of access of passengers to the MEV-I.
- MEV-I stability assessment and naval architecture requirements.
- The second design is the demo of MEV-I. This MEV will be manufactured, tested as part of the PALAEMON demo. Design and analysis of the MEV-I demo for as a scaled down demo of the real MEV-I, as well as stability assessment of the vehicle
- LCA (Life Cycle Assessment) for the materials which will be used to manufacture the MEV-I demo but also the real MEV-I. These materials are Composites, for lightness of the Vehicles, which are from bio fibres and bio resins. Bio-composites are chosen because they present greater biodegradability and lower emission of greenhouse gases in their manufacturing compared with the traditional synthetic compounds derived from petroleum.
- Launching mechanism of the MEV-I from the Ship HELLENIC SPIRIT, including design and analysis of the launching mechanism.
- A study on current rules and guidelines for operation and testing of life saving vehicles.

2 Introduction

PALAEMON aims to address the increased need for new and smart passenger ship evacuation methodologies which can especially address large passenger ships and Cruise Ships. This will be accomplished by defining a new ICT framework for the safe, efficient and timely evacuation of the people from the ship to the evacuation vehicles. The second part is the radical rethink of mass evacuation systems with the introduction of MEVs with the scope to introduce new vehicles which can accommodate at least two times the passenger capacity compared to current solutions.

The PALAEMON project proposes to replace the lifeboats at each side of the ship with MEVs, which can accommodate at least 2X more people than the traditional life boats. This will be showcased in the following sections using the new MEV designs which can offer increased passenger accommodation as well as more efficient use of the space on board the ship for storing and operating the MEVs. Furthermore, the launching mechanism proposed, offers considerable advantages compared to current solutions which use Davits. A simple yet effective mechanism is proposed which can accommodate simple launch procedures, which can be operated, if necessary by gravity alone.

The current report is structured as follows:

- Description of bio-composites and LCA

- Materials mechanical properties
- Short description of MEV-I real scale, general particulars, passenger capacity, weights for the structure as well as the whole vehicle with the maximum number of passengers on board
- Design and analysis
- Structural Drawings of the Vehicle
- Proposed seating arrangement
- Stability Calculations for MEV-I real scale
- Launching mechanism description
- Description of the boarding procedure of the MEV-I
- Design and analysis of the launching mechanism
- Structural drawing of the mechanism
- MEV-I demo short description general particulars, passenger capacity, weights for the structure as well as the whole vehicle with the maximum number of passengers on board
- Design and analysis
- Structural Drawings of the Vehicle
- Proposed seating arrangement
- Stability Calculations for MEV-I real scale and demo
- Regulatory requirements

3 Bio Composites

3.1 Description of Bio Composite materials

The chosen bio composite has been **SR InfuGreen 810 Epoxy resin**.

The InfuGreen 810 is a two-component epoxy system. It has been specially formulated for resin transfer processes, such as injection or infusion.

This system has a very low viscosity at ambient temperature. The different hardeners allow the production of small to very large parts. The cured system gives a temperature resistance up to 100°C (Tg onset). The hardeners SD 4770 and 4771 are designed for very thick laminates by infusions.

SR InfuGreen 810 Epoxy resin is produced with about 38 % of carbon from plant origin and has a lower environmental impact than standard Epoxy systems. The bio-based Carbon content of our resin is certified by an independent laboratory using Carbon. This percentage is function of the carbon origin contained in the epoxy molecule.

3.2 Life Cycle Analysis

Due to their toughness, adhesion, heat resistance and chemical resistance, epoxy resins are used in a wide variety of industrial applications including composite processes such as casting, laminating, bonding, molding and infusion. In this study, we present the results of the environmental impacts associated with the production of a Liquid Epoxy Resin (LER) mix of Bisphenol and Epichlorohydrin which is used for infusion or laminating components in various industrial sectors.

The goal is to compare the different Chemicals processing routes:

A. <u>GreenPOXY Process</u>

Oleaginous oil → Bio-Refinery → Epichlorohydrin → Green liquid Epoxy

The manufacturing processes include: production of epichlorohydrin from glycerin or propylene, production of the liquid epoxy resin, treatment of organic liquid and gaseous waste streams of epichlorohydrin, treatment of waste water of epichlorohydrin (lime milk and ammoniac process), industrial biological wastewater treatment of wastewater results from production in chemical plants, the production processes of energy wares used to mix and production.

B. <u>Convencional Epoxy Process</u>

Crude oil Extract → oil refinery → Epichlorohydrin → Petroleum liquid

The upstream processes include the following inflow of raw materials and energy wares needed for the production of the product: extraction of petroleum resources, agricultures phases, transport of resources to refinement, refinement of resources, the production processes of energy wares used in the extraction, oil refinement and manufacturing, production of other products used such as detergents, for cleaning, fertilizer and pesticides used, etc.

Methodology:

To improve the environmental communication around bio-based products, Life Cycle Assessment is a strong tool for quantifying the environmental impact associated with the product life cycle. The study is principally performed to obtain data of environmental impacts defined into Product Classification Group (PCR): UN CPC 341 – Basic Organic Chemicals. Moreover, a link to the environmental situation around LER – production plant, different significative environmental scopes and indicators were defined: carbon footprint knowledge, human toxicity and water and air pollution indicators.

Table 1: Environmental Impacts.

Environmental Impacts - CML methods		
Scopes	Significatives environmentals impacts (CML - methods)	Units
Footprint Carbon knowledge	Climate change - GWP100	Kg CO_2 eq.
Human toxicity	Human toxicity HTP inf	Kg $C_2H_4Cl_2$ eq.
Air pollution	Acidification potential	Kg SO_2 eq.
	Photochemical oxidation high Nox	Kg C_2H_4 eq.
	Ozone layer depletion - ODP steady state	Kg CFC-11 eq.
Water Pollution	Eutrophication - generic	Kg PO_2^{3-} eq.
Consumption of resources	Depelation of abiotic resources - fossil fuels	MJ
	Depletion of abiotic resources - elements, ultimate reserves	Kg Sb eq.
Others Polltuion indicators	Freshwater aquatic ecotoxicity - FAETP inf	Kg $C_6H_4Cl_2$ eq.
	Marine aquatic ecotoxicity - MAETP inf	
	Terrestrial exotoxicity - TETP inf	

And if we compare Mechanical parameters GreenPoxy used with Convencional Epoxy we can see are similar.

Table 2: Main mechanical parameters compared.

Mechanical properties (N/mm^2)	GreenPoxy	Conventional Epoxy
Elasticity (Tension)	3150-3700	3150-3300
Maximun resistance (Tension)	74-78	71-80
Shear Strength	50-53	53-57
Compression	122-127	124-134
Elasticity (Flexion)	3100-3600	3050-3380
Resistance (Flexion)	121-128	115-128

Main results:

The comparison of bio-based and petroleum based LER production, from the point of view of LCA, shows that in almost all applied impact categories the bio-based route is more environmentally considerate in comparison to the petroleum route. The main reason is the impact of the upstream manufacturing processes and petroleum extraction and refinery processes. The acidification impact difference, between the different routes is less important than the other impacts. The main reason is in upstream process: desulfurization of crude petroleum balanced against pesticide production. Bio-based production of LER is generally less environmentally serious in comparison to petroleum-based production. However, there is an expected shift in impact on the Eutrophication phenomena. This is because of pesticide and fertilizer application during oilseed plantation for biodiesel production.

4 Mechanical Properties of Bio composites

The mechanical properties of the bio-composites, which were used as the material model for the structural calculations for north MEV-I real scale and demo are depicted below:

4.1 Flex fibers-resin UD

The bio composites mechanical properties represent the unidirectional model.

Table 4.1 Bio composite Density.

Density tn/mm^3

2.e-009

Table 4.2 Orthotropic Elasticity.

Young's Modulus X direction MPa	Young's Modulus Y direction MPa	Young's Modulus Z direction MPa	Poisson's Ratio XY	Poisson's Ratio YZ	Poisson's Ratio XZ	Shear Modulus XY MPa	Shear Modulus YZ MPa	Shear Modulus XZ MPa
50000	8000	8000	0.3	0.4	0.3	5000	3846.1	5000

Table 4.3 Orthotropic Strain Limits.

Tensile X direction	Tensile Y direction	Tensile Z direction	Compressive X direction	Compressive Y direction	Compressive Z direction	Shear XY	Shear YZ	Shear XZ
2.44e-002	3.5e-003	3.5e-003	-1.5e-002	-1.2e-002	-1.2e-002	1.6e-002	1.2e-002	1.6e-002

Table 4.4 Orthotropic Stress Limits.

Tensile X direction MPa	Tensile Y direction MPa	Tensile Z direction MPa	Compressive X direction MPa	Compressive Y direction MPa	Compressive Z direction MPa	Shear XY MPa	Shear YZ MPa	Shear XZ MPa
50	35	35	-1000	-120	-120	80	46.154	80

Table 4.5 Puck Constants.

Compressive Inclination XZ	Compressive Inclination YZ	Tensile Inclination XZ	Tensile Inclination YZ
0.25	0.2	0.3	0.2

TABLE 4.6 Additional Puck Constants.

Interface Weakening Factor	Degradation Parameter s	Degradation Parameter M
0.8	0.5	0.5

TABLE 4.7 Tsai-Wu Constants.

Temperature C	Coupling Coefficient XY	Coupling Coefficient YZ	Coupling Coefficient XZ
	-1	-1	-1

4.2 Honeycomb

Honeycomb core was used for the bio-composite structures of the MEVs.

Table 4.8 Honeycomb Density

Density tn/mm^3
8.e-011

Table 4.9 Honeycomb Orthotropic Elasticity

Young's Modulus X direction MPa	Young's Modulus Y direction MPa	Young's Modulus Z direction MPa	Poisson's Ratio XY	Poisson's Ratio YZ	Poisson's Ratio XZ	Shear Modulus XY MPa	Shear Modulus YZ MPa	Shear Modulus XZ MPa
1	1	255	0.49	1.e-003	1.e-003	1.e-006	37	70

Table 4.10 Honeycomb Orthotropic Stress Limits

Tensile X direction MPa	Tensile Y direction MPa	Tensile Z direction MPa	Compressive X direction MPa	Compressive Y direction MPa	Compressive Z direction MPa	Shear XY MPa	Shear YZ MPa	Shear XZ MPa
0	0	5.31	0	0	-5.31	0	1.21	2.24

5 MEV-I real scale

5.1 Description

MEV-I has been designed for replacing the existing Lifeboats on the HELLINIC SPIRIT, which is the test bed for the PALAEMON technologies. HELLENIC SPIRIT is equipped with four Lifeboats, two on each side (stbd and port). Each Lifeboat can accommodate 150 persons (Figure 5.1).

Figure 5.1: Side view of HELLENIC SPIRIT, showing the two Lifeboats.

The MEV-I has been designed to occupy as much space as possible on the deck of the ship, without obstructing the whole deck. In this sense there is ample room behind the MEVs for passage of people (Figure 5.2).

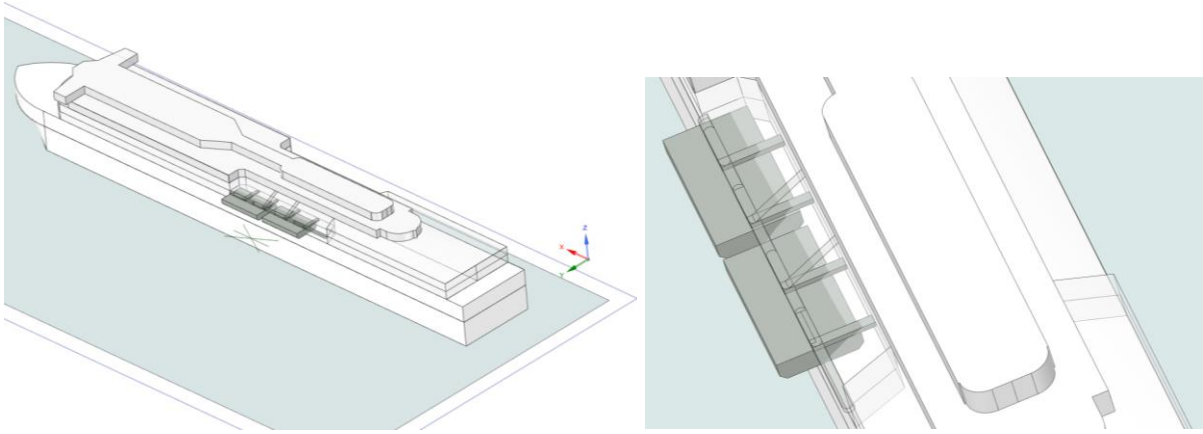

Figure 5.2: Left the placement of the MEVs on deck of HELLENIC SPIRIT, right: closer look at the placement of the MEVs on deck 8, showing the space behind the MEVs for free passage of people.

The main Particulars of MEV-I in real scale (Figure 5.3) are shown below:

L = 14.6 m

B = 8 m

D = 2m

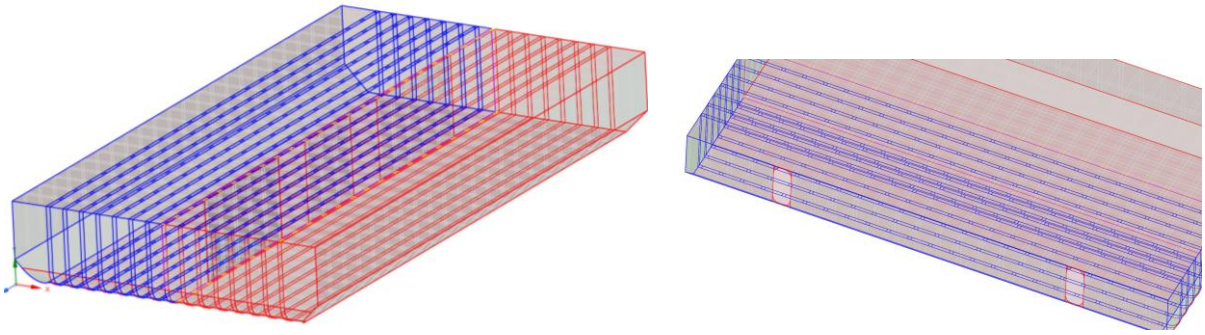

Figure 5.3: MEV-I structural drawing showing the design and longitudinals as well as transverse stiffeners (right picture). Two doors for more quick entry into the MEV (left picture).

The weight groups imposed as boundary conditions in the numerical simulation are:

a) Weight of structure 13 tn.
b) Weight of 315 passengers (35.4 tn, with SF).
c) Weight (front section) of navigation equipment = 500 kg.
d) Weight of engine = 1 tn.

Three loading cases were simulated, considering fully loaded condition (all 315 passengers on-board, Navigation and engine weight:

a) The MEV-I on sagging condition (is supported by the crest of waves, fore and aft).
b) The MEV-I supported on the inflatables (crest of waves in the inflatables).
c) Launching condition; the MEV-I supported by the two attachment points, for launching, at the top of the structure.

5.2 Design and analysis

The analysis was linear elastic, using an orthotropic material model for the bio-composites with properties shown in Section 4. For the sandwich structure, honeycomb material model was used with properties shown in Section 4.

For the structural analysis, the following parameters were evaluated as well as three failure criteria:

i) Max Stress
ii) Max deformation
iii) Composite Failure Criteria
iv) Tsai Wu Failure Criteria
v) Puck Failure criteria

The results for the 3 loading cases are depicted below:

a) <u>Fixed supports on fore and aft end of MEV (being supported by two waves fore and aft)</u>

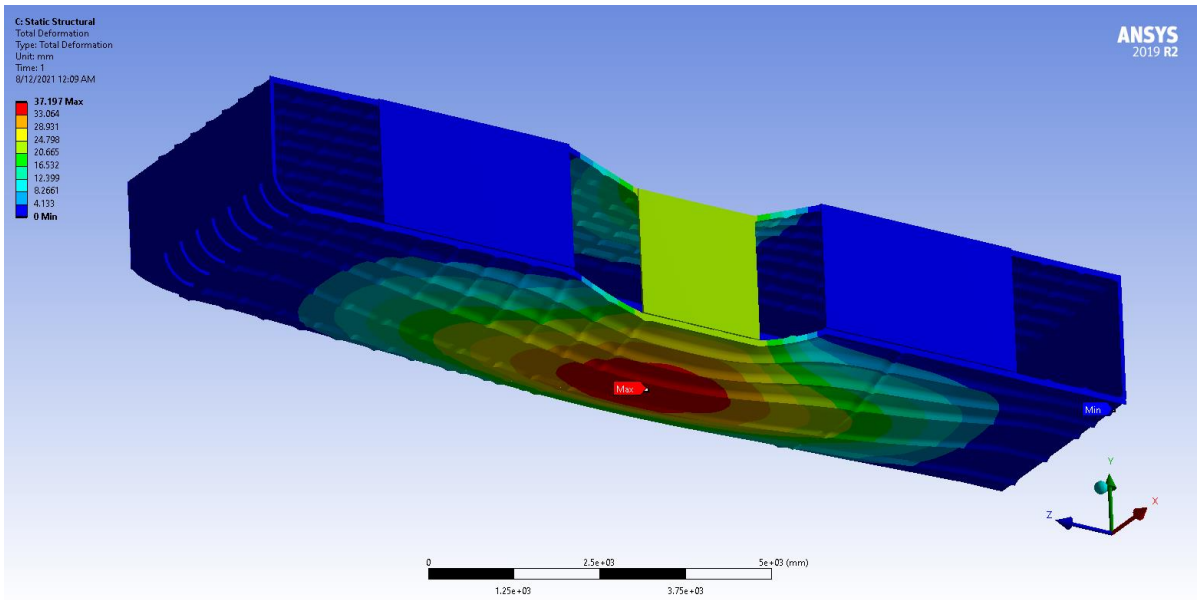

Figure 5.4: Deformation (mm).

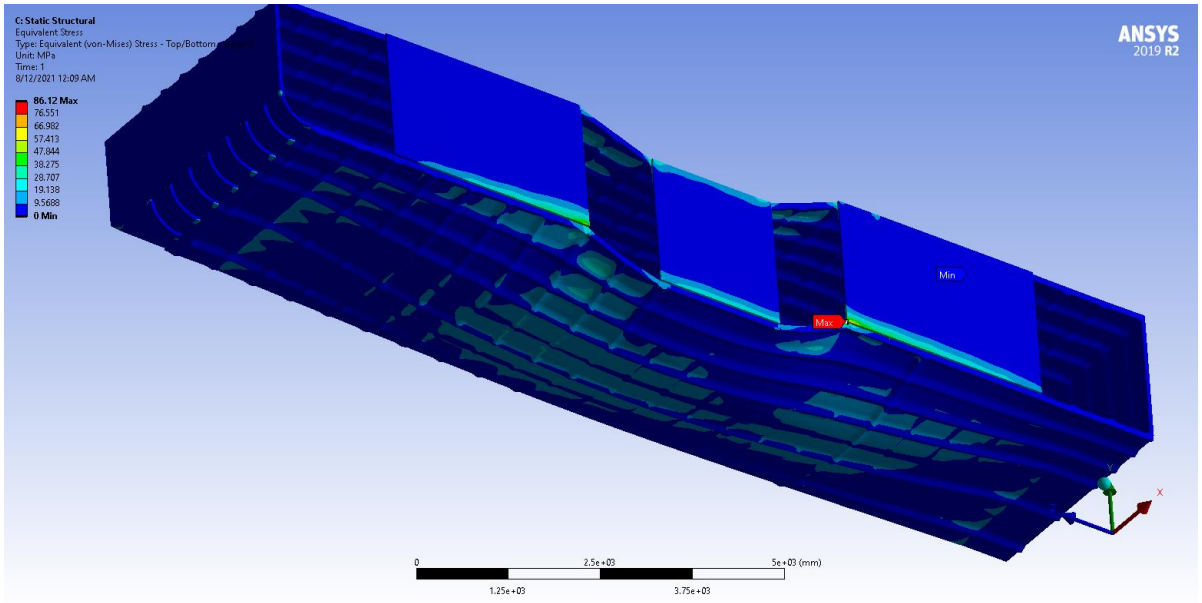

Figure 5.5: Equivalent Stress.

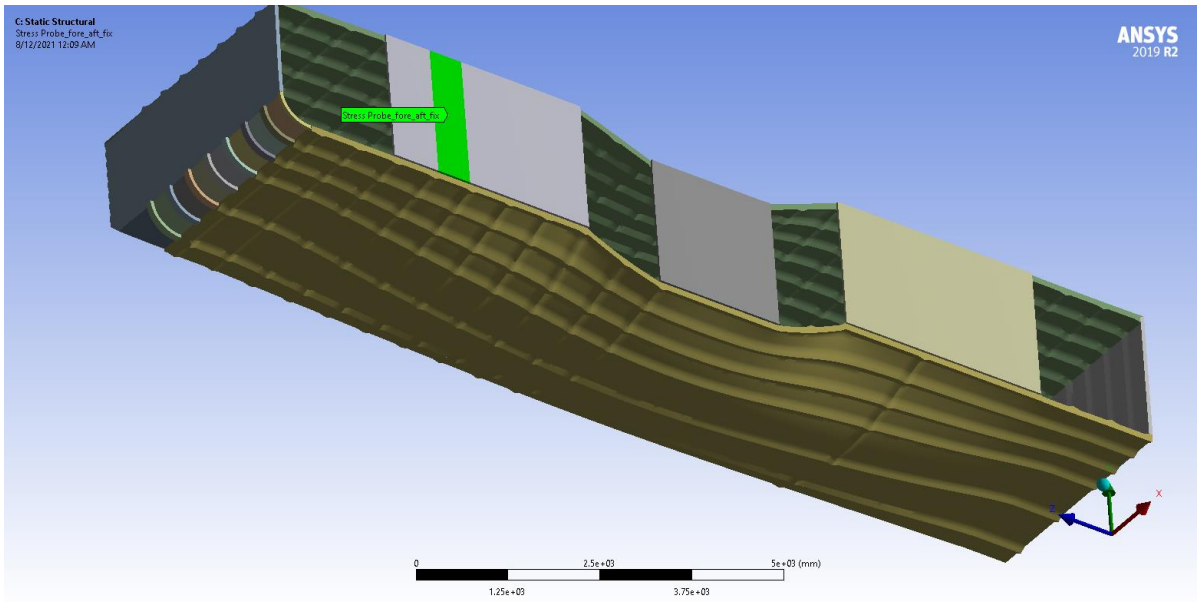

Figure 5.6: Max stress probe on mid section σ= 24 MPa.

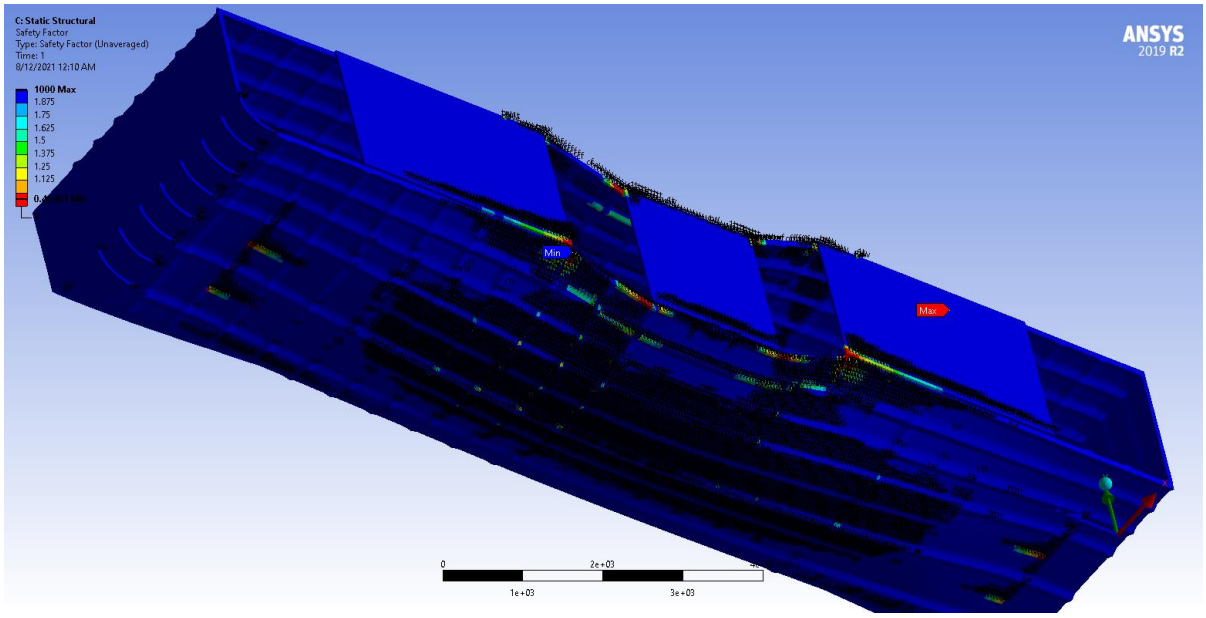

Figure 5.7: Safety factor on structure (Max stresses on support and stress concentration areas-mesh dependent).

b) <u>Fixed supports on sides of MEV (being supported by the two inflatables)</u>

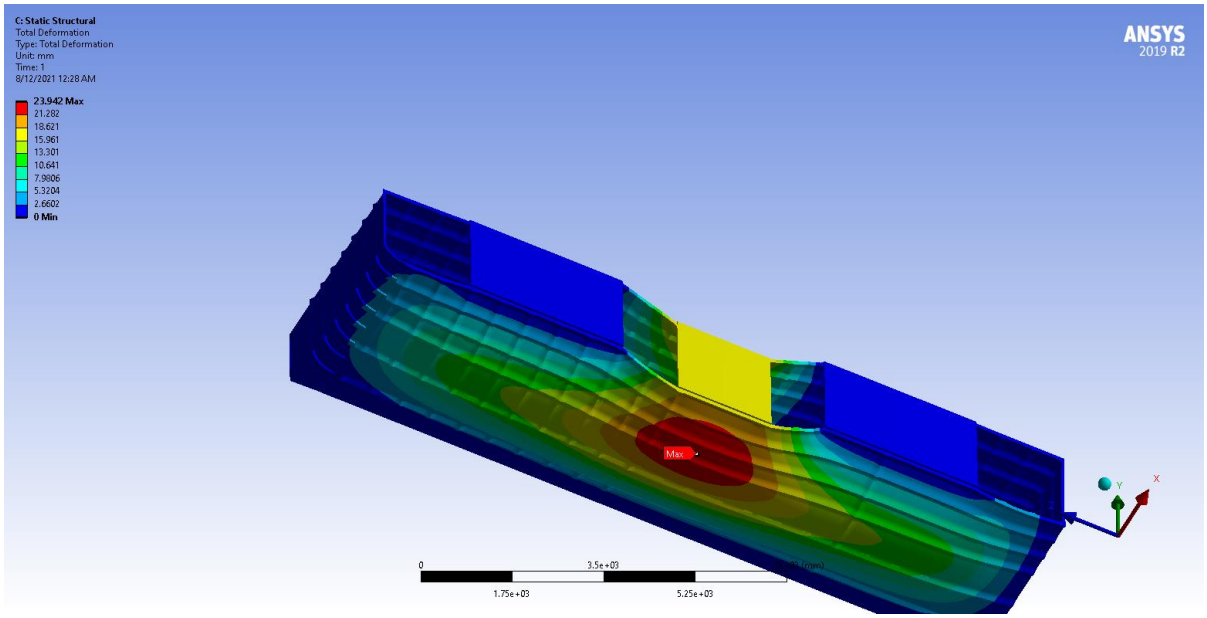

Figure 5.8: Deformation (mm).

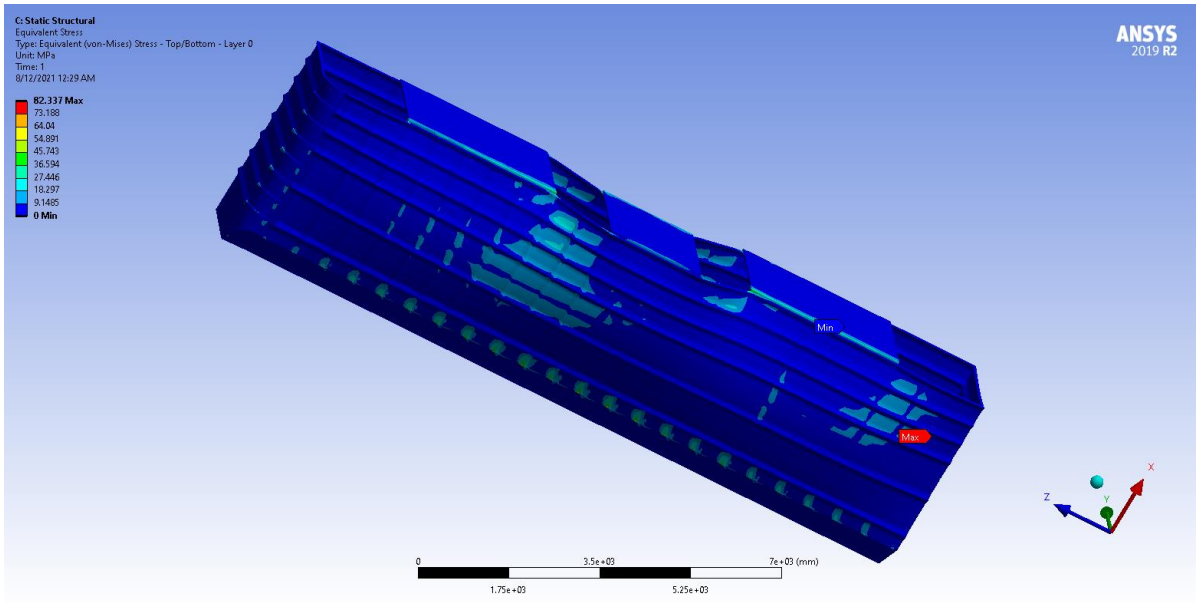

Figure 5.9: Equivalent Stress.

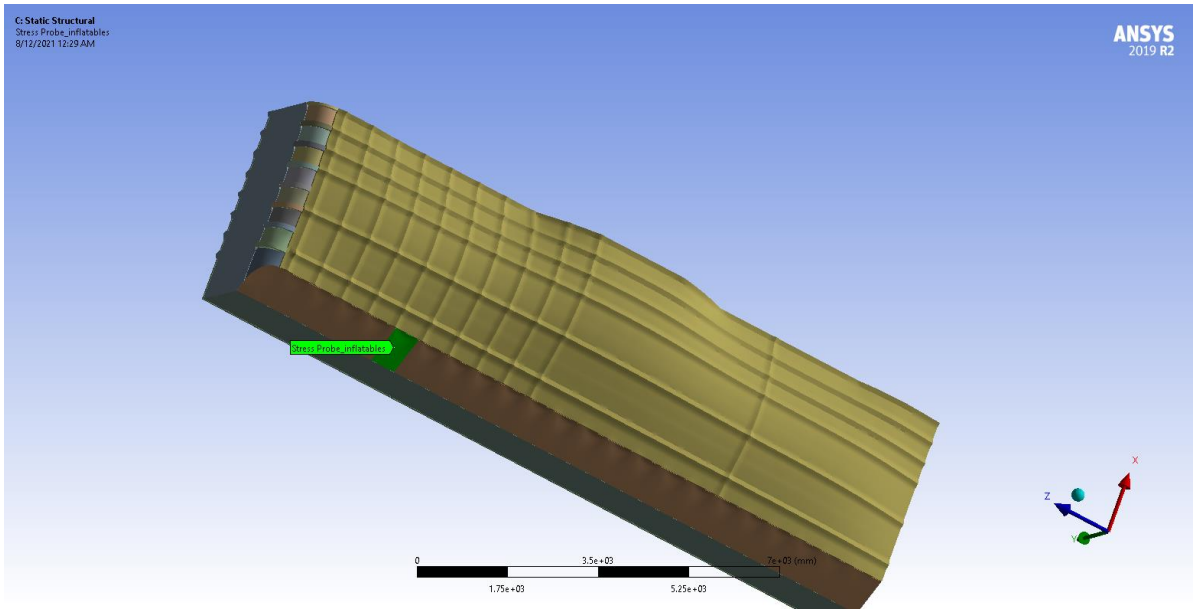

Figure 5.10: Max stress probe on inflatable attachment σ= 33.6 MPa.

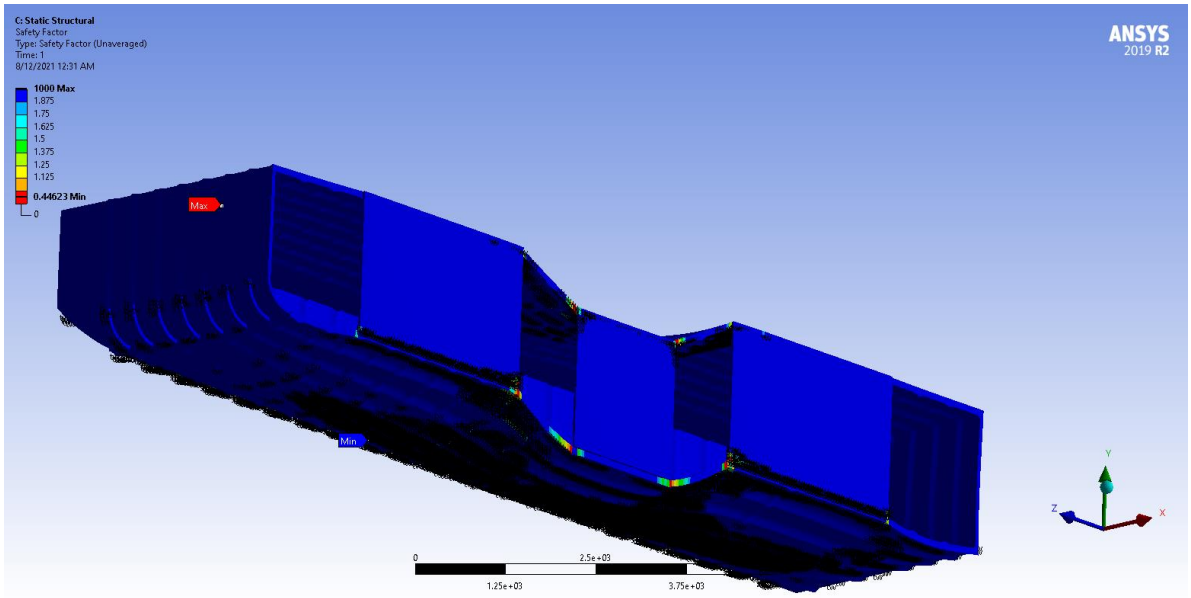

Figure 5.11: Safety factor on structure (Max stresses on support and stress concentration areas-mesh dependent).

c) <u>Fixed supports on top (being supported by launching ropes)</u>

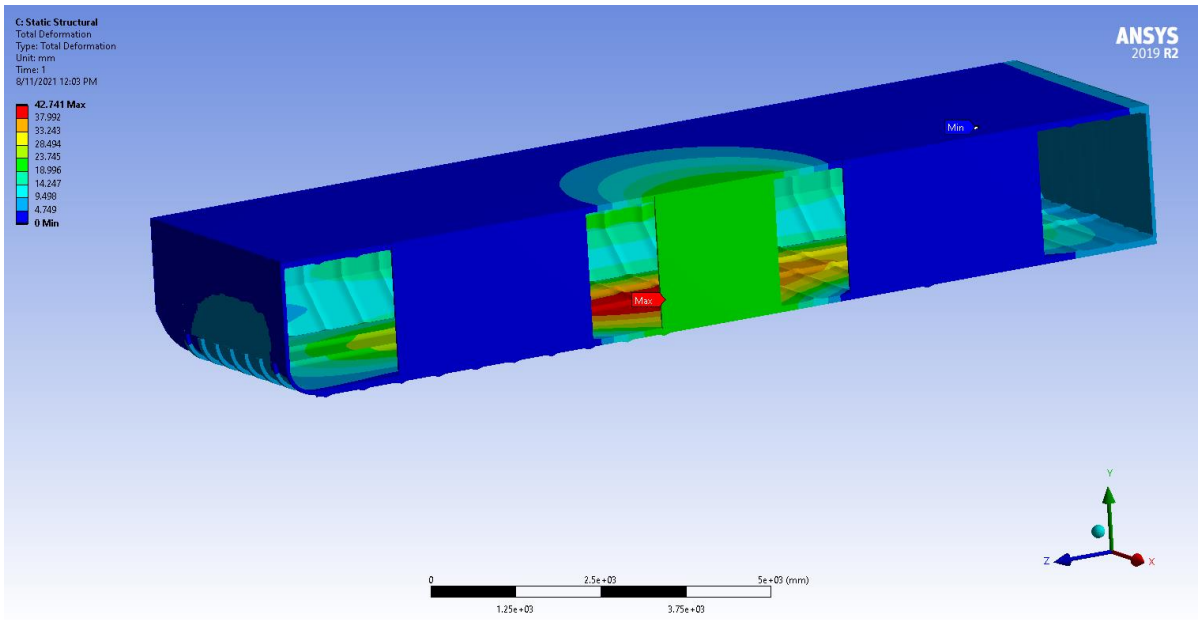

Figure 5.12: Deformation (mm).

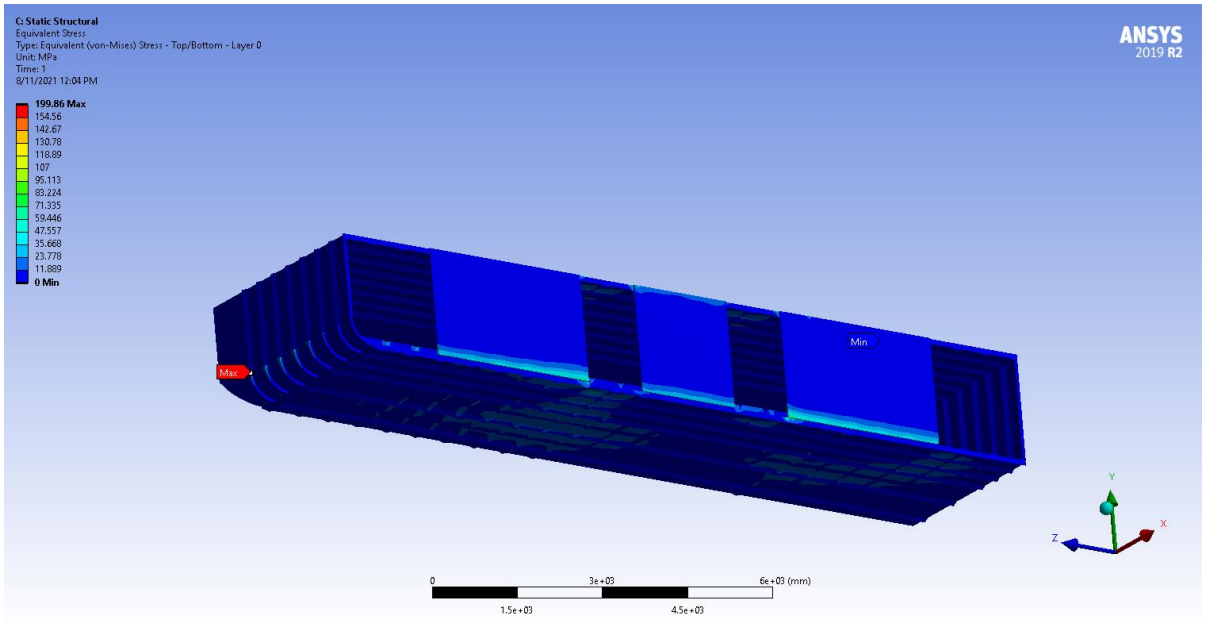

Figure 5.13: Equivalent Stress.

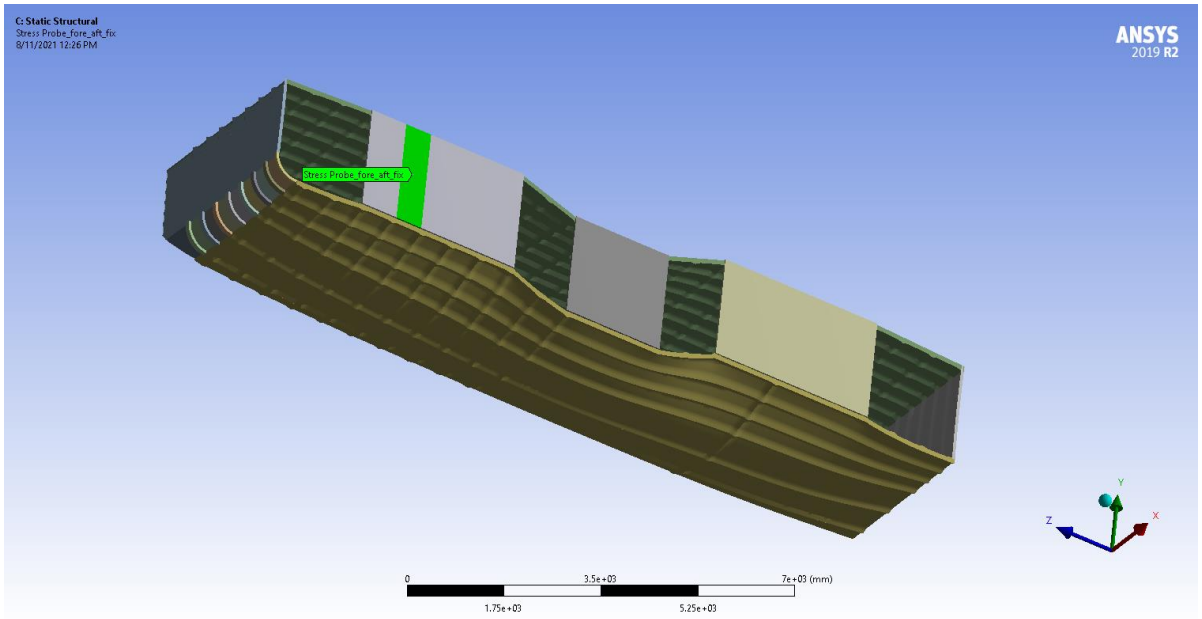

Figure 5.14: Max stress probe on mid section σ= 41 MPa.

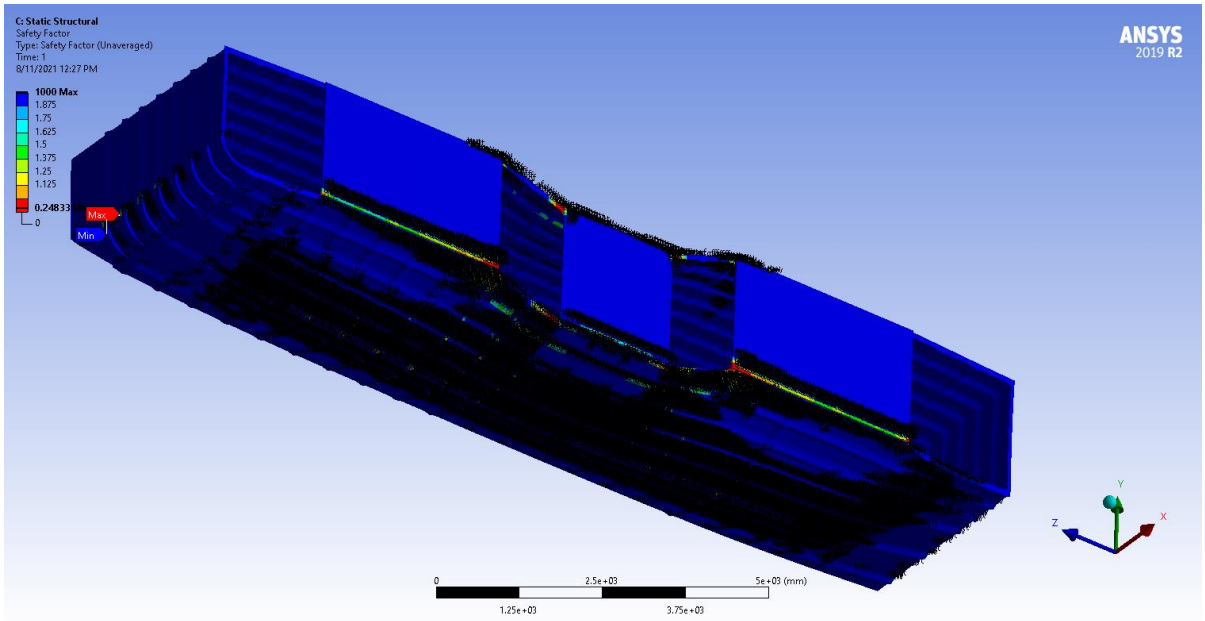

Figure 5.15: Safety factor on structure (Max stresses on support and stress concentration areas-mesh dependent).

5.3 Structural drawings

The structural drawings as well as the layers and sequence of the bio-composite panels are depicted below. The MEV designs are shown only half due to symmetry of the vehicle on the CL.

<u>Outer skin (all plating)</u>

8 layers +- 45 degrees with respect to the Coordinate system, where (X, y) plane is tangent on each side.

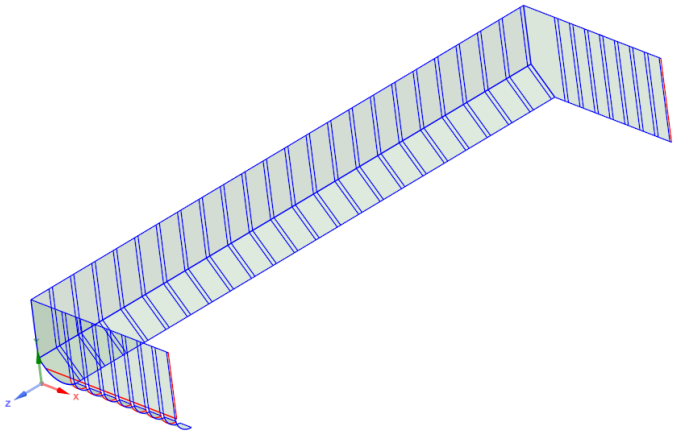

Figure 5.16: Side-front, back plating.

<u>Top – bottom sandwich structures</u>

Orientations are displayed with respect to the Coordinate system, where (X, y) plane is tangent on each side.

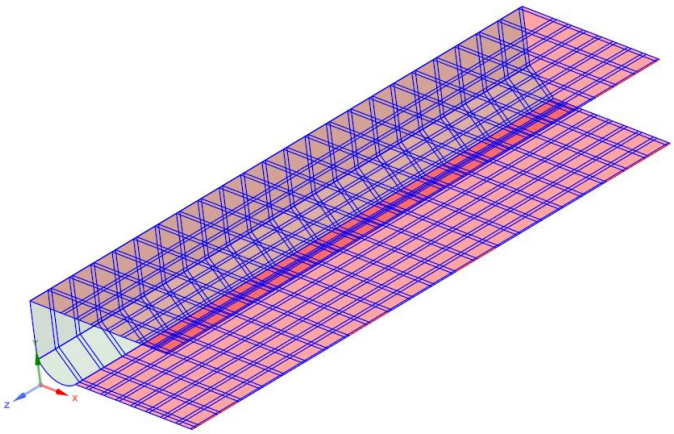

Figure 5.17: Top bottom sandwich structures.

LAYERS	ORIENTATION	MATERIAL	THICKNESS
1	45	Flax	1
2	-45	Flax	1
3	0	Flax	1
4	0	Flax	1
5	0	Flax	1
6	0	Flax	1
7	0	Flax	1
8	0	Flax	1
9	0	Flax	1
10	0	Flax	1
11	0	honecomp	20
12	0	Flax	1
13	0	Flax	1
14	0	Flax	1
15	0	Flax	1
16	0	Flax	1
17	0	Flax	1
18	0	Flax	1
19	0	Flax	1
20	45	Flax	1
21	-45	Flax	1

All longitudinal and transverse stiffeners have the structure, illustrated in the Figure 5.18.

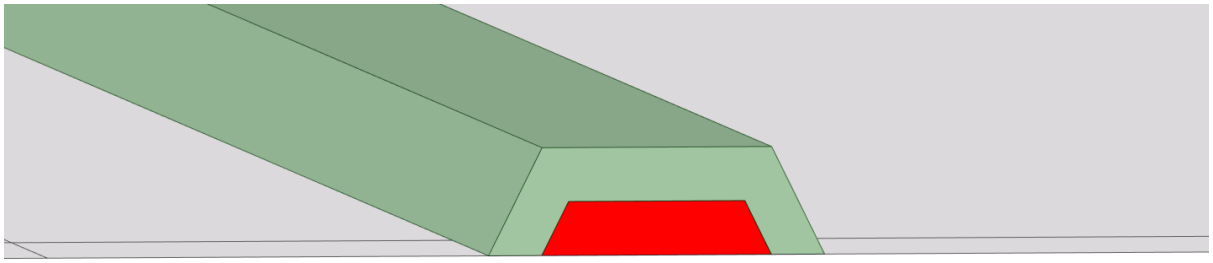

Figure 5.18: Transverse and longitudinal stiffener section: red Honeycomb core, Green composite. Orientations are displayed with respect to the Local Coordinate system of the stiffeners, where the local (x, y) plane is tangential to the plane of the transversal stiffeners (x parallel on the direction of the stiffener and y vertical). In other words, O angle (x direction) is the direction of the length of the stiffener.

Transverse stiffeners

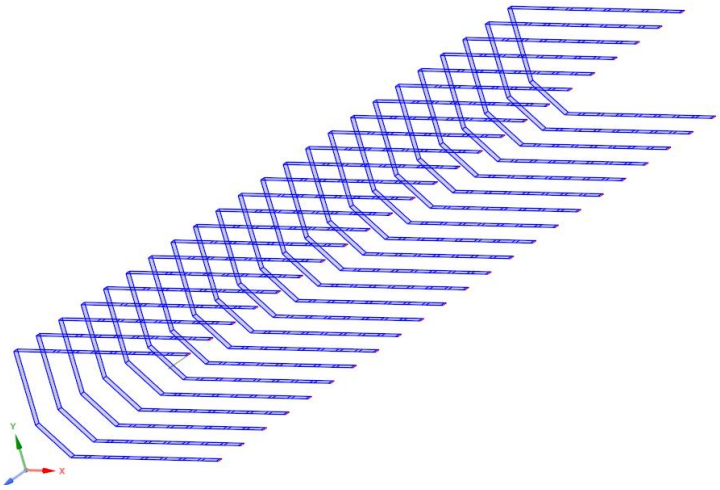

Figure 5.19: Transverse stiffeners.

LAYERS	ORIENTATION	MATERIAL	THICKNESS
1	45	Flax	1
2	-45	Flax	1
3	45	Flax	1
4	-45	Flax	1
5	45	Flax	1
6	-45	Flax	1
7	45	Flax	1
8	-45	Flax	1
9	45	Flax	1
10	-45	Flax	1
11	0	honeycomp	20

Longitudinal stiffeners

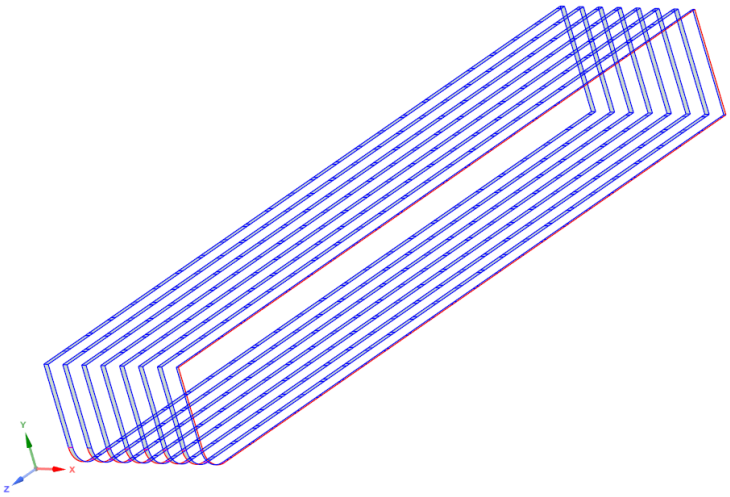

Figure 5.20: Longitudinal stiffeners.

LAYERS	ORIENTATION	MATERIAL	THICKNESS
1	45	Flax	1
2	-45	Flax	1
3	0	Flax	1
4	0	Flax	1
5	0	Flax	1
6	0	Flax	1
7	0	Flax	1
8	0	Flax	1
9	0	Flax	1
10	0	Flax	1
11	0	Flax	1
12	0	Flax	1
13	45	Flax	1
14	-45	Flax	1
11	0	honeycomb	40

Middle wall

The middle wall sandwich structure. The fibre angles are with respect to a coordinate system, where the (x, y) plane is tangent on the wall surface and the x direction (0 angle) is parallel to the length of the MEV. Therefore, 90 degrees fibre angle is the Y direction.

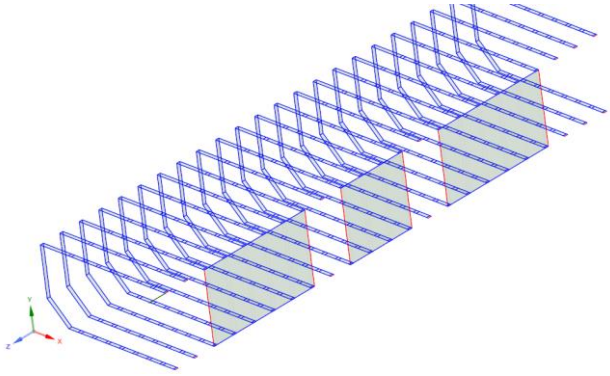

Figure 5.21: Middle wall sandwich structures.

LAYERS	ORIENTATION	MATERIAL	THICKNESS
1	45	Flax	1
2	-45	Flax	1
3	90	Flax	1
4	90	Flax	1
5	90	Flax	1
6	90	Flax	1
7	45	Flax	1
8	-45	Flax	1
9	0	honecomp	20
10	45	Flax	1
11	-45	Flax	1
12	90	Flax	1
13	90	Flax	1
14	90	Flax	1
15	90	Flax	1
16	45	Flax	1
17	-45	Flax	1

5.4 Seating arrangement

The Seating arrangement has been calculated for 315 people. Although precise interior design will be done in T4.4, an initial estimation of the maximum allowable persons in the MEV was conducted in this Task. The seating space is according to rules and guidelines described in D4.1, while each seat has been placed on junction of longitudinal and a transversal stiffener, for better structural distribution and support of the weight of the passengers on stiffened members of the MEV hull.

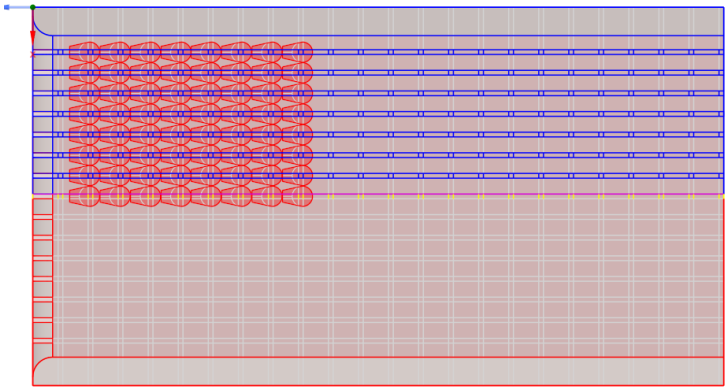

Figure 5.22: Seating arrangement.

The MEV-I has two doors for quick access of the passengers in case of emergency.

5.5 Stability assessment

This Section presents the main hydrostatic particulars as well as the preliminary stability calculations for MEV-I real scale.

5.5.1 Hydrostatic particulars

The hydrostatic particulars of MEV-I real scale for the both conditions, i.e. with and without the inflatables to be deployed are presented.

5.5.1.1 Without inflatables

Hydrostatic Table

Draft	Disp	LCB	VCB	LCF	KM_L	KM_T	BM_L	BM_T	TPC	MTC	WSA	WPA
m	t	m	m	m	m	m	m	m	t/cm	t·m/cm	m^2	m^2
0.10	11.70	6.536	0.050	6.564	185.457	37.560	185.407	37.509	1.20	1.49	119.75	116.91
0.20	23.94	6.556	0.101	6.581	95.454	20.252	95.353	20.151	1.25	1.56	127.71	121.74
0.30	36.65	6.565	0.153	6.583	65.066	14.543	64.913	14.390	1.29	1.63	135.56	126.25
0.40	49.81	6.568	0.205	6.571	49.614	11.731	49.408	11.526	1.34	1.69	143.43	130.50
0.50	63.34	6.571	0.258	6.586	39.996	10.026	39.739	9.769	1.37	1.72	150.92	133.62
0.60	77.20	6.575	0.310	6.600	33.631	8.933	33.321	8.623	1.40	1.76	158.44	136.68
0.70	91.21	6.578	0.362	6.599	28.566	7.662	28.204	7.299	1.40	1.76	164.76	136.76
0.80	105.23	6.581	0.414	6.598	24.861	6.741	24.447	6.327	1.40	1.76	171.09	136.80
0.90	119.25	6.583	0.465	6.598	22.038	6.049	21.573	5.583	1.40	1.76	177.41	136.80
1.00	133.28	6.585	0.516	6.598	19.819	5.512	19.303	4.996	1.40	1.76	183.73	136.80
1.10	147.30	6.586	0.567	6.598	18.032	5.087	17.465	4.520	1.40	1.76	190.05	136.80
1.20	161.32	6.587	0.618	6.598	16.565	4.745	15.947	4.127	1.40	1.76	196.37	136.80
1.30	175.34	6.588	0.668	6.598	15.340	4.466	14.672	3.797	1.40	1.76	202.69	136.80
1.40	189.36	6.589	0.719	6.598	14.304	4.235	13.586	3.516	1.40	1.76	209.01	136.80
1.50	203.39	6.589	0.769	6.598	13.418	4.043	12.649	3.274	1.40	1.76	215.33	136.80

Cross Curves

The Table below provides the KN values for each draft and angle of heel respectively.

Heel	10º	20º	30º	40º	50º	60º	70º	80º	90º
Draft									
0.10	2.633	3.010	3.046	2.929	2.714	2.420	2.083	1.666	1.171
0.20	2.297	2.778	2.923	2.896	2.736	2.458	2.074	1.610	1.090
0.30	2.023	2.592	2.798	2.827	2.684	2.401	2.019	1.565	1.059
0.40	1.787	2.433	2.691	2.721	2.570	2.300	1.942	1.518	1.047
0.50	1.585	2.293	2.583	2.596	2.451	2.200	1.871	1.479	1.040
0.60	1.402	2.167	2.458	2.467	2.336	2.111	1.808	1.444	1.034
0.70	1.245	2.052	2.323	2.337	2.227	2.023	1.746	1.410	1.029
0.80	1.125	1.934	2.185	2.211	2.116	1.935	1.684	1.377	1.026
0.90	1.030	1.808	2.047	2.083	2.005	1.846	1.622	1.344	1.023
1.00	0.953	1.677	1.909	1.953	1.893	1.758	1.560	1.312	1.021
1.10	0.888	1.543	1.769	1.822	1.781	1.669	1.499	1.279	1.019
1.20	0.833	1.407	1.628	1.690	1.668	1.580	1.437	1.247	1.018
1.30	0.786	1.275	1.487	1.559	1.555	1.491	1.376	1.215	1.017
1.40	0.735	1.147	1.344	1.429	1.443	1.402	1.314	1.183	1.016
1.50	0.674	1.020	1.202	1.299	1.332	1.315	1.253	1.152	1.015

5.5.1.2 With inflatables

Hydrostatic Table

Draft	Disp	LCB	VCB	LCF	KM_L	KM_T	BM_L	BM_T	TPC	MTC	WSA	WPA
m	t	m	m	m	m	m	m	m	t/cm	t·m/cm	m^2	m^2
0.10	11.90	7.171	0.051	7.210	182.786	57.390	182.735	57.340	1.23	1.49	125.16	119.56
0.20	24.20	7.206	0.101	7.284	89.104	26.712	89.003	26.611	1.20	1.48	141.09	117.52
0.30	37.90	7.223	0.155	7.261	69.549	26.492	69.394	26.337	1.43	1.80	176.97	139.44
0.40	52.22	7.238	0.209	7.313	49.613	18.625	49.405	18.416	1.40	1.77	308.31	136.85
0.50	75.81	7.248	0.284	7.287	57.124	18.225	56.840	17.941	2.41	2.95	338.20	235.31
0.60	100.23	7.259	0.349	7.299	44.301	14.543	43.952	14.195	2.46	3.02	363.27	240.15
0.70	124.47	7.268	0.407	7.307	34.419	10.486	34.011	10.078	2.37	2.90	396.74	231.22
0.80	148.31	7.274	0.462	7.301	29.276	9.179	28.814	8.716	2.40	2.93	413.55	233.94
0.90	172.44	7.278	0.517	7.303	25.606	8.269	25.089	7.753	2.43	2.96	430.00	236.86
1.00	196.85	7.281	0.570	7.303	22.707	7.507	22.137	6.936	2.45	2.98	446.67	238.73
1.10	220.96	7.283	0.623	7.300	19.872	6.402	19.249	5.779	2.39	2.91	461.81	233.60
1.20	244.90	7.285	0.674	7.300	18.042	5.889	17.367	5.214	2.39	2.91	470.85	233.60
1.30	268.85	7.286	0.726	7.300	16.546	5.476	15.820	4.750	2.39	2.91	479.89	233.60

Cross Curves

The Table below provides the KN values for each draft and angle of heel respectively.

Heel	**10º**	**20º**	**30º**	**40º**	**50º**	**60º**	**70º**	**80º**	**90º**
Draft									
0.10	3.315	3.513	3.410	3.168	2.796	2.351	1.870	1.405	1.034
0.20	3.011	3.299	3.279	3.098	2.809	2.444	2.030	1.603	1.128
0.30	2.750	3.145	3.184	3.063	2.835	2.521	2.136	1.667	1.137
0.40	2.542	3.012	3.108	3.039	2.852	2.563	2.169	1.691	1.155
0.50	2.257	2.835	3.007	2.996	2.841	2.553	2.163	1.694	1.169
0.60	2.001	2.678	2.913	2.930	2.777	2.499	2.126	1.679	1.177
0.70	1.776	2.541	2.814	2.834	2.687	2.426	2.076	1.656	1.182
0.80	1.580	2.419	2.704	2.720	2.586	2.345	2.021	1.629	1.185
0.90	1.419	2.292	2.576	2.594	2.476	2.259	1.962	1.600	1.187
1.00	1.274	2.161	2.434	2.460	2.360	2.167	1.899	1.569	1.189
1.10	1.155	2.027	2.287	2.322	2.242	2.075	1.836	1.537	1.190
1.20	1.059	1.883	2.135	2.182	2.122	1.981	1.772	1.505	1.191
1.30	0.978	1.731	1.979	2.040	2.001	1.886	1.707	1.473	1.192
1.40	0.906	1.571	1.821	1.896	1.879	1.791	1.642	1.440	1.193
1.50	0.839	1.413	1.660	1.750	1.755	1.694	1.576	1.407	1.194

5.5.2 Weight Analysis

This section analyses the calculations that were conducted for the weight groups of MEV-I real scale to estimate the LCG, TCG and KG. Furthermore, the loading conditions of MEV-I (i.e. without and with the inflatables) are presented.

The weight groups that were calculated are the following:

- Lightweight
  - Structure
  - Inflatables
  - Outfitting
  - Engine
  - Equipment
- Deadweight
  - Passengers
  - Fuel
  - Provisions
    - Water
    - Food

Each weight group is analysed below.

5.5.2.1 Lightship

Structure

The weight of the structure is estimated at 11.40 tn. The MEV-I is symmetrical in regards to the center plane, therefore TCG will be located on the CL. The weight of the structure is assumed to be equally distributed through the length of the MEV-I, hence the LCG is assumed that is located at 7.30 m from the stern. Finally, the VCG because of the windows and that the bottom of MEV-I has more stiffeners compared to the top, VCG is assumed at 1.80 m from the BL.

Group	Weight	LCG	TCG	VCG	AFT ext.	FOR. ext.
	(tn)	(m)	(m)	(m)	(m from AP)	
Structure	11.400	7.300	0.000	1.800	0.000	14.600

Inflatables

The weight of the inflatables is calculated at 1.00 tn (i.e. 0.502 kg per side). For the inflatables two different conditions were analysed: 1) when they are stored; and 2) when they are inflated. In both conditions the weight is considered that is distributed equally.

Regarding the center of gravity, for the condition 1, LCG was assumed at 7.30 m from the stern, TCG on the CL and VCG at 0.25 form the BL. For condition 2, the center of gravity was calculate based on the geometric center of the inflatables when they are inflated, i.e. LCG at 7.315 m from the stern, TCG on the CL and VCG at 0.405 m from the bottom of the inflatables.

Group	Weight	LCG	TCG	VCG	AFT ext.	FOR. ext.
	(tn)	(m)	(m)	(m)	(m from AP)	
Inflatables 1	1.00	7.300	0.000	0.250	0.000	14.600
Inflatables 2	1.00	7.315	0.000	0.405	-0.800	15.200

Outfitting

This weight group includes all the equipment (i.e. navigational, electrical, etc.), pipping (fuel, cooling water, air conditioning, etc.), appendages (e.g. propeller, etc.), air conditioning pumps, lights and the respective cables, that will be installed on the MEV-I real scale.

The weight is estimated at 2.00 tn. The center of gravity is estimated at LCG 7.00 m from the stern (because the propeller and the rest of the appendages regarding the engine are located towards the stern), TCG on the CL and VCG at 1.30 m above BL.

Group	Weight	LCG	TCG	VCG	AFT ext.	FOR. ext.
	(tn)	(m)	(m)	(m)	(m from AP)	
Outfitting	2.000	7.000	0.000	1.300	0.000	14.600

Engine

The weight of the main engine is estimated 1.00 tn. The center of gravity for the main engine is located on the geometric center of the respective space, because the engine will be located on the CL. Therefore, the LCG is located at 0.239 m from the stern, TCG on the CL, and VCG 0.414 m form the BL.

Group	Weight	LCG	TCG	VCG	AFT ext.	FOR. ext.
	(tn)	(m)	(m)	(m)	(m from AP)	
Engine	1.000	0.239	0.000	0.414	0.000	0.478

Equipment

This weight includes all the equipment required by LSA Code[1], excluding the food and water supplies, that will be on the MEV-I real scale. The weight of the equipment is estimated 500 kg (i.e. 0.50 tn), and it will be stored in the forward area of the MEV-I

Group	Weight	LCG	TCG	VCG	AFT ext.	FOR. ext.
	(tn)	(m)	(m)	(m)	(m from AP)	
Equipment	0.500	14.361	0.000	0.505	14.122	14.600

5.5.2.2 Deadweight

Persons on-board

MEV-I real scale is designed to have on-board 313 passengers and 2 crew members. Therefore, 315 persons in total will be on-board. The average weight of each person is assumed 100 kg (i.e. 0.10 tn), therefore 31.50 tn in total. According to the seating arrangement the weight in equally distributed and the passenger are seated symmetrically from the CL, therefore the LCG is located at 7.30 m from the stern and the TCG on the CL. Regarding the VCG, it is assumed an average height of 1.70 m and that the center of gravity of a seating person is located at half of this height. Hence the VCG is located at 0.85 m above BL.

Group	Weight	LCG	TCG	VCG	AFT ext.	FOR. ext.
	(tn)	(m)	(m)	(m)	(m from AP)	
Persons	31.500	7.300	0.000	0.850	0.000	13.600

Fuel

The fuel tanks will be located at the stern of the MEV-I close to the engine. They will be two symmetric tanks (one port and one starboard).

Group	Weight	LCG	TCG	VCG	AFT ext.	FOR. ext.
	(tn)	(m)	(m)	(m)	(m from AP)	
Total Fuel	0.600	0.239	0.000	0.414	0.000	0.478

For each condition FLD (Full Load Departure) and FLA (Full Load Arrival) it is assumed that 100% of the group is on the MEV-I for the FLD and 10% will remain on the FLA.

[1] Ch. IV, § 4.4.8

Provisions

This weight group includes the water and food supplies that MEV-I should carry according to the maximum capacity of the persons on-board. According to LSA Code, for a person on-board it is required 3 lt of water[2] and food that provides 10000 kJ (i.e. 2400 kCal) per day[3].

To calculate the required weight of the water supplies 315 persons are considered on-board consuming 3 lt for two days (1.5lt per day). By applying a safety factor of 25%, therefore the water weight is 1.181 tn.

Regarding the food weight, 2 packs per person (one per day) is required. According to LSA and indicatively the weight of each pack is 0.55 gr. By applying a safety factor of 25%, therefore the food weight is calculated 0.433 tn.

The water and food supplies are assumed to be located beneath the seats. Therefore, the LCG for both supplies will be the same. LCG is 7.30 m from the stern, TCG is located on the CL and the VCG is 0.400 m above the BL.

It is noted that the free surface moment effect from the water supplies is neglected because it should be in specific packs according to LSA Code.

Group	Weight	LCG	TCG	VCG	AFT ext.	FOR. ext.
	(tn)	(m)	(m)	(m)	(m from AP)	
Water	1.181	7.300	0.000	0.400	1.000	13.600
Food	0.433	7.300	0.000	0.400	1.000	13.600
Total Provisions	1.614	7.300	0.000	0.400	1.000	13.600

For each condition FLD (Full Load Departure) and FLA (Full Load Arrival) it is assumed that 100% of the group is on the MEV-I for the FLD and 10% will remain on the FLA.

5.5.3 Total weights groups without inflatables

Main group	Group	Weight	LCG	TCG	VCG	AFT ext.	FOR. ext.
		(tn)	(m)	(m)	(m)	(m from AP)	
Lightship	Structure	11.400	7.300	0.000	1.800	0.000	14.600
	Inflatables 1	1.004	7.300	0.000	0.250	0.000	14.600
	Outfitting	2.000	7.000	0.000	1.300	0.000	14.600
	Engine	1.000	0.239	0.000	0.414	0.000	0.478
	Equipment	0.500	14.361	0.000	0.505	14.122	14.600
	Total (LS)	**15.900**	**7.040**	**0.000**	**1.511**	**0.000**	**14.600**

[2] Ch. IV, § 4.4.8.9
[3] Ch. IV, § 4.4.8.12

Main group	Group	Weight	LCG	TCG	VCG	AFT ext.	FOR. ext.
		(tn)	(m)	(m)	(m)	(m from AP)	
Load	Persons	31.500	7.300	0.000	0.850	0.000	13.600
	Fuel FLD	0.600	0.239	0.000	0.093	0.000	0.478
	Fuel FLA	0.060	0.239	0.000	0.093	0.000	0.478
	Provisions FLD	1.614	7.300	0.000	0.400	1.000	13.600
	Provisions FLA	0.161	7.300	0.000	0.400	1.000	13.600

5.5.4 Total weights groups with inflatables

Main group	Group	Weight	LCG	TCG	VCG	AFT ext.	FOR. ext.
		(tn)	(m)	(m)	(m)	(m from AP)	
Lightship	Structure	11.400	7.300	0.000	2.200	0.000	14.600
	Inflatables 2	1.004	7.200	0.000	0.405	-0.800	15.200
	Outfitting	2.000	7.000	0.000	1.700	0.000	14.600
	Engine	1.000	0.239	0.000	0.814	0.000	0.478
	Equipment	0.500	14.361	0.000	0.905	14.122	14.600
	Total (LS)	**15.900**	**7.340**	**0.000**	**1.896**	**-0.800**	**15.200**

Main group	Group	Weight	LCG	TCG	VCG	AFT ext.	FOR. ext.
		(tn)	(m)	(m)	(m)	(m from AP)	
Load	Persons	31.500	7.300	0.000	1.250	0.000	13.600
	Fuel FLD	0.600	0.239	0.000	0.493	0.000	0.478
	Fuel FLA	0.060	0.239	0.000	0.493	0.000	0.478
	Provisions FLD	1.614	7.300	0.000	0.800	1.000	13.600
	Provisions FLA	0.161	7.300	0.000	0.800	1.000	13.600

5.5.5 Loading Conditions Analysis

For the MEV-I stability for the following loading conditions were analysed:

- Lightship
  The structure of MEV-I without any persons on-board, fuels and provisions.
- Full Load Departure
  MEV-I fully loaded with maximum capacity of passengers on board fuels and provisions (100%).
- Full Load Arrival
  MEV-I with maximum capacity of passengers on board and 10% of fuels and provisions on-board.
- Half passengers at B/2 FLD (According to LSA CH.IV §4.4.5)
  MEV-I fully loaded with provisions and fuels. The capacity of persons on-board is assumed in half and the TCG on B/2 from the CL, according to LSA CH.IV §4.4.5.
- Half passengers at B/2 FLA (According to LSA CH.IV §4.4.5)
  MEV-I with 10% of fuels and provisions on-board. The capacity of of persons on-board is assumed in half and the TCG on B/2 from the CL, according to LSA CH.IV §4.4.5.

The summary table below (Table 4.11) presents all the hydrostatics particulars for each of the loading conditions without the inflatables deployed. Additionally, Table 4.12 presents the hydrostatics particulars for each of the loading conditions with the inflatables deployed.

The detailed analysis for the stability calculations is shown in the Appendix.

Table 4.11: Summary table of the loading conditions analysed for the MEV-I real scale (without the inflatables deployed).

Items	Units	LS	FLD	FLA	FLD_HPAX	FLA_HPAX
Deadweight	tn	0.00	33.70	31.70	18.00	16.00
Lightship	tn	15.90	15.90	15.90	15.90	15.90
Displacement	tn	15.90	49.60	47.60	33.90	31.90
LCG	m	7.040	7.131	7.204	7.053	7.157
TCG	m	0.000	0.000	0.000	0.930	0.988
VCG	m	1.511	1.038	1.068	1.126	1.176
FSM	tn·m	0.000	14.400	12.500	14.400	12.500
FSC	m	0.000	0.290	0.262	0.424	0.392
KG_{Corr}	m	1.511	1.328	1.330	1.550	1.568
LCB	m	7.038	7.128	7.203	7.048	7.155
TCB	m	0.000	0.000	0.000	1.021	1.081
VCB	m	0.078	0.235	0.226	0.198	0.191
Heel	deg.	0.000	0.000	0.000	3.850	3.900
Draft at LCF	m	0.155	0.459	0.442	0.312	0.294
Draft at AP	m	0.165	0.483	0.451	0.337	0.304
Draft at FP	m	0.145	0.436	0.433	0.287	0.283
Mean Draft at Midships	m	0.155	0.459	0.442	0.312	0.294
Trim by Stern	m	0.021	0.047	0.019	0.050	0.021
BM_T	m	27.962	11.558	11.880	15.300	16.024
Effective GM	m	26.547	10.465	10.776	13.779	14.389
BM_L	m	116.217	41.352	42.889	58.103	61.423
Waterplane Area	m^2	103.060	112.690	112.190	108.770	108.240
LCF	m	7.240	7.284	7.293	7.260	7.268
TCF	m	0.000	0.000	0.000	0.280	0.281
TPC	tn/cm	1.056	1.155	1.150	1.115	1.110
MTC	tn·m/cm	1.267	1.405	1.399	1.348	1.341
Area under GZ curve up to 30 deg. > 0.055	m·rads	1.110	0.847	0.860	0.495	0.483
Area under GZ curve from 30 to 40 deg. or downflood > 0.03	m·rads	0.368	0.354	0.356	0.215	0.206
Area under GZ curve up to 40 deg. or downflood > 0.09	m·rads	1.479	1.201	1.216	0.709	0.689
Maximum GZ to be at least 0.20 m at 30 deg. or above	m	2.445	2.108	2.123	1.309	1.271
Maximum GZ to be at an angle > 25 deg.	deg.	17.374	26.891	26.365	24.426	23.849
GM to be at least 0.15 m	m	26.547	10.465	10.776	13.779	14.389

Table 4.12: Summary table of the loading conditions analysed for the MEV-I real scale (with the inflatables deployed).

Items	Units	LS	FLD	FLA	FLD_HPAX	FLA_HPAX
Deadweight	tn	0.00	33.70	31.70	18.00	16.00
Lightship	tn	15.90	15.90	15.90	15.90	15.90
Displacement	tn	15.90	49.60	47.60	33.90	31.90
LCG	m	7.034	7.129	7.202	7.050	7.154
TCG	m	0.000	0.000	0.000	0.930	0.988
VCG	m	1.896	1.433	1.463	1.519	1.569
FSM	tn·m	0.000	18.000	14.500	18.000	14.500
FSC	m	0.000	0.363	0.304	0.531	0.454
KG_{Corr}	m	1.896	1.796	1.767	2.050	2.022
LCB	m	7.032	7.126	7.201	7.045	7.153
TCB	m	0.000	0.000	0.000	1.003	1.062
VCB	m	0.067	0.199	0.192	0.159	0.152
Heel	deg.	0.000	0.000	0.000	2.230	2.250
Draft at LCF	m	0.133	0.382	0.368	0.263	0.248
Draft at AP	m	0.140	0.397	0.372	0.282	0.255
Draft at FP	m	0.124	0.367	0.363	0.245	0.241
Mean Draft at Midships	m	0.132	0.382	0.368	0.263	0.248
Trim by Stern	m	0.016	0.030	0.008	0.037	0.013
BM_T	m	43.428	20.018	21.108	23.603	25.618
Effective GM	m	41.600	18.421	19.524	24.051	24.743
BM_L	m	138.156	52.746	55.515	70.380	74.818
Waterplane Area	m^2	120.380	139.100	139.930	127.230	128.650
LCF	m	7.226	7.310	7.285	7.285	7.295
TCF	m	0.000	0.000	0.000	0.220	0.268
TPC	tn/cm	1.234	1.426	1.434	1.304	1.319
MTC	tn·m/cm	1.505	1.792	1.810	1.631	1.632
Area under GZ curve up to 30 deg. > 0.055	m·rads	1.326	1.076	1.092	0.693	0.684
Area under GZ curve from 30 to 40 deg. or downflood > 0.03	m·rads	0.379	0.36	0.364	0.213	0.209
Area under GZ curve up to 40 deg. or downflood > 0.09	m·rads	1.704	1.436	1.456	0.905	0.892
Maximum GZ to be at least 0.20 m at 30 deg. or above	m	2.902	2.434	2.463	1.646	1.624
Maximum GZ to be at an angle > 25 deg.	deg.	13.107	17.304	17.188	15.93	15.817
GM to be at least 0.15 m	m	41.6	18.421	19.524	24.051	24.743

5.6 Discussion

The current design and analysis of MEV-I which is intended to replace the Life boats on the ship used as a test bed for PALAEMON, exhibits the following benefits with respect to current life boats and launching mechanism.

- The MEV-I has a capacity of 315 persons which is more than 50% increase in passenger capacity compared to the current Life boats (150 persons).
- It will be manufactured using bio-composites which is fully in line with the goals of the circular economy of the EC[4].
- The proposed design offers lightweight structure, two doors for ease of access of people in the MEV during evacuation.
- Proposed design is structurally sound as indicated in all three loading cases, were the SF is way more than 1.875 for all loading cases. The areas where the SF is less than 1.875.
- MEV-I real scale has sufficient stability for all loading conditions of both scenarios that were studied, i.e. with and without the inflatables deployed.

6 Launching mechanism

6.1 Description

The launching mechanism which was selected for MEV-I can be show in following Figure 6.1.

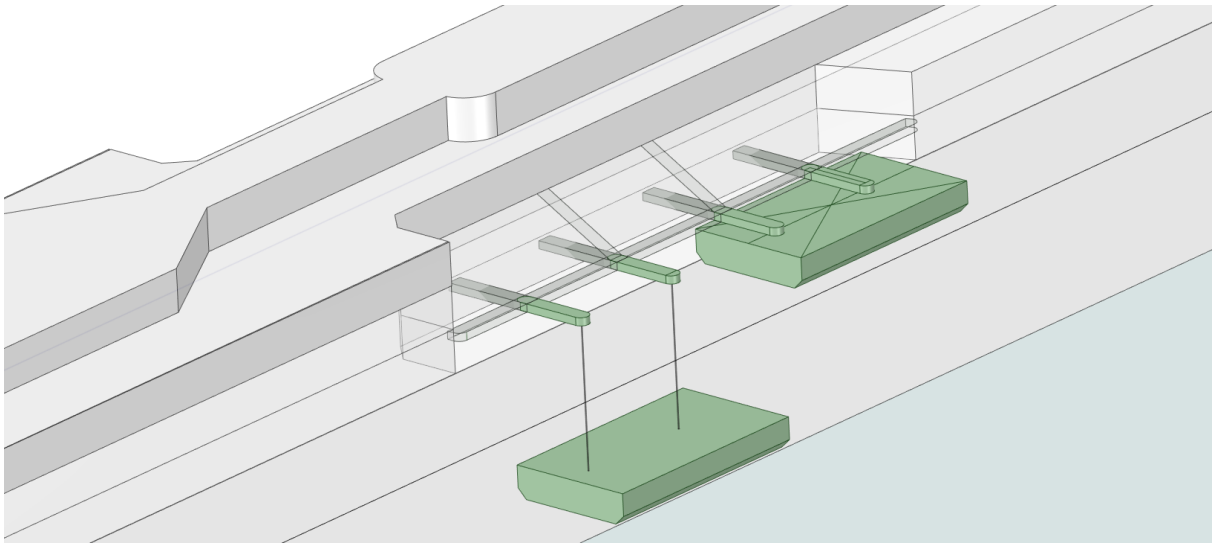

Figure 6.1: Launching mechanism for MEV-I, illustrated on the HELLENIC Spirit. The Life boats of Hellenic Spirit have been replaced by MEVs.

It offers a simple yet robust design which operates using hydraulic mechanism. The MEV-I moved to the fully extended position, where the MEV-I is attached only by the ropes and is ready to be lowered. In that position the passengers on-board the MEV-I and then, when it is fully loaded or it is deemed necessary, it is lowered (Figure 6.2).

[4] https://ec.europa.eu/environment/strategy/circular-economy-action-plan_de

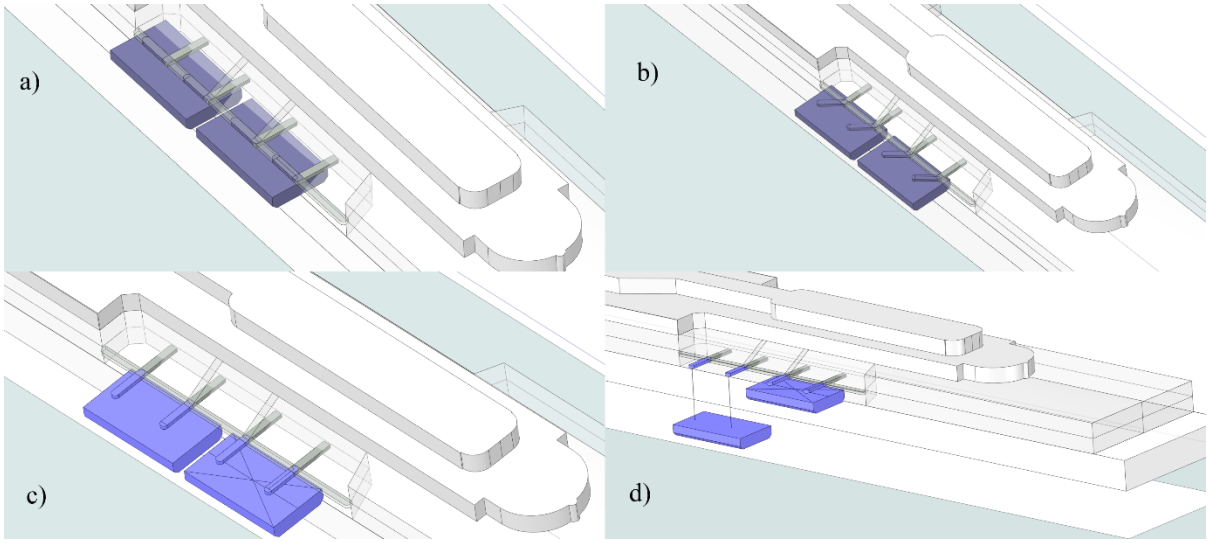

Figure 6.2: Launching mechanism showing the different stages of operation a) MEV-I is seating idle on the deck of the ship, b) holding beams are rotating (stopped at 45 degrees angle) on the launching structure with the MEVs to bring them to the launching position, c) fully rotated the launching beam and the passengers on-board the MEV, d) the MEVs are lowered to the sea where the inflatables will be inflated.

The material used for the launching structure is high strength AH 36 naval steel[5], with Yield strength of 365 MPa[6]. Plate thickness of frame (Figure 6.3) 30 mm. The structure of the holding beam is shown in Figure 6.4, with plate thickness of 30 mm.

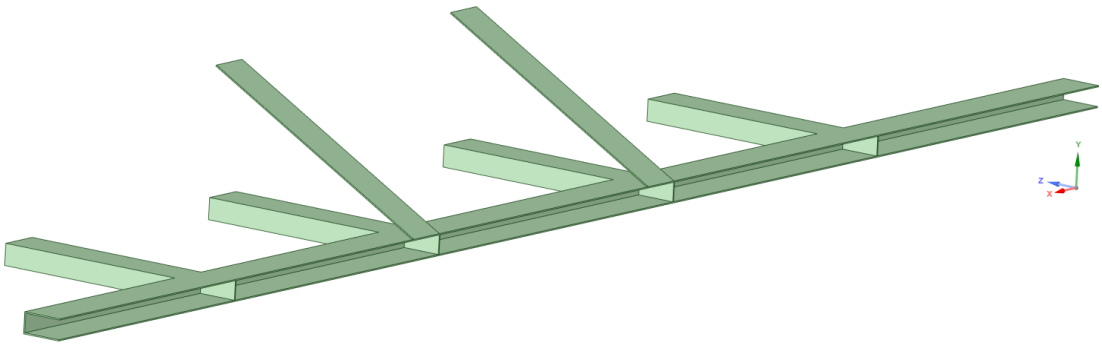

Figure 6.3: Steel frame for launching the MEV-I.

[5] https://www.totalmateria.com/page.aspx?ID=CheckArticle&site=kts&NM=81
[6] https://www.aasteel.com/ah-36-dh-36-eh-36-40/

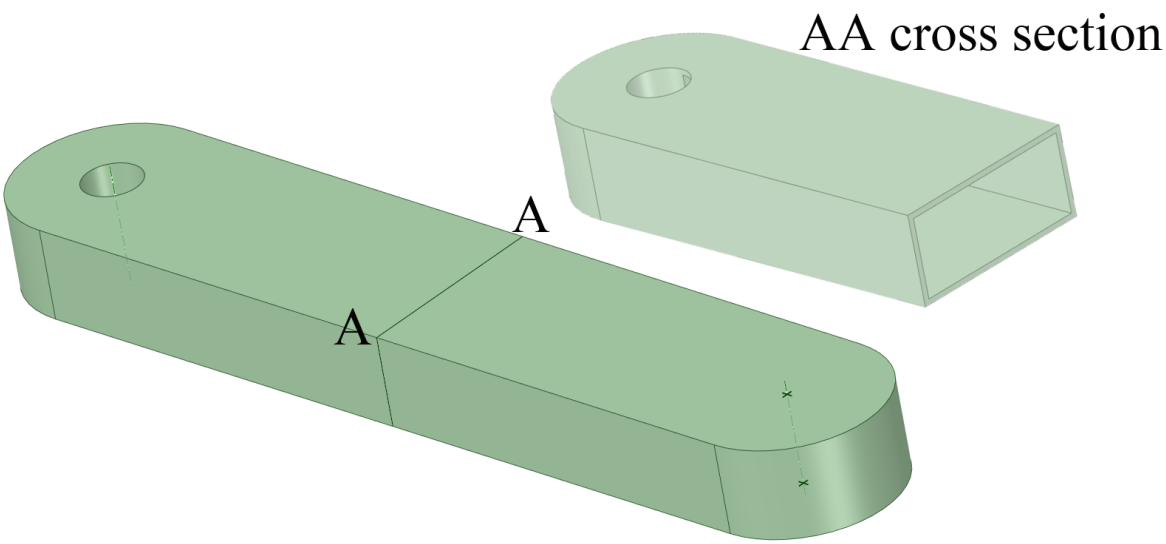

Figure 6.4: Drawing of the Holding beam of MEV-I, with cross section at the middle. All plate thicknesses are 30mm.

6.2 Design and analysis

The launching structure is analysed, by imposing loads and boundary conditions at the most severe loading condition of the structure. This is when the holding beam is fully extended (Figure 6.2 d) and the MEV has been boarded by the full complement of passengers (315). The total weight of the MEV-I at 50 tn which means that every holding beam has 25 tn to hold. Furthermore, the end beams of the structure are considered clamped to the rest of the superstructure of the ship (Figure 6.5).

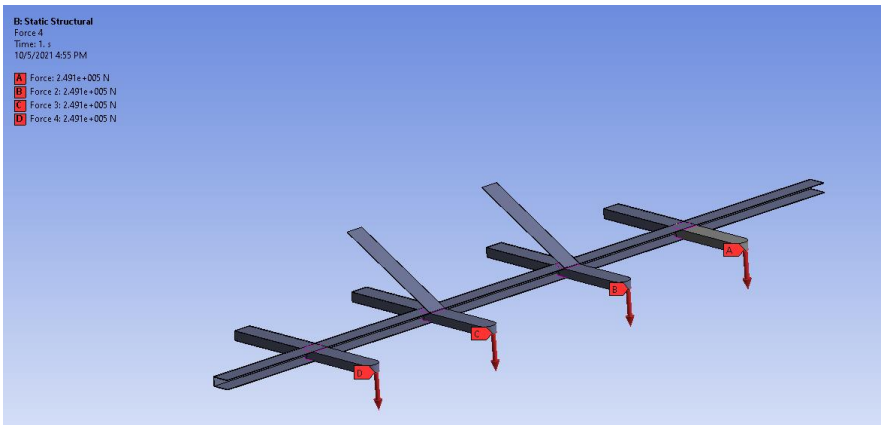

Figure 6.5: Loading of the launching structure.

The analysis is linear elastic, since the design is considering that the response of the structure should be well within the elastic regime of the structure's material. The results are illustrated in Figures 6.6 and 6.7.

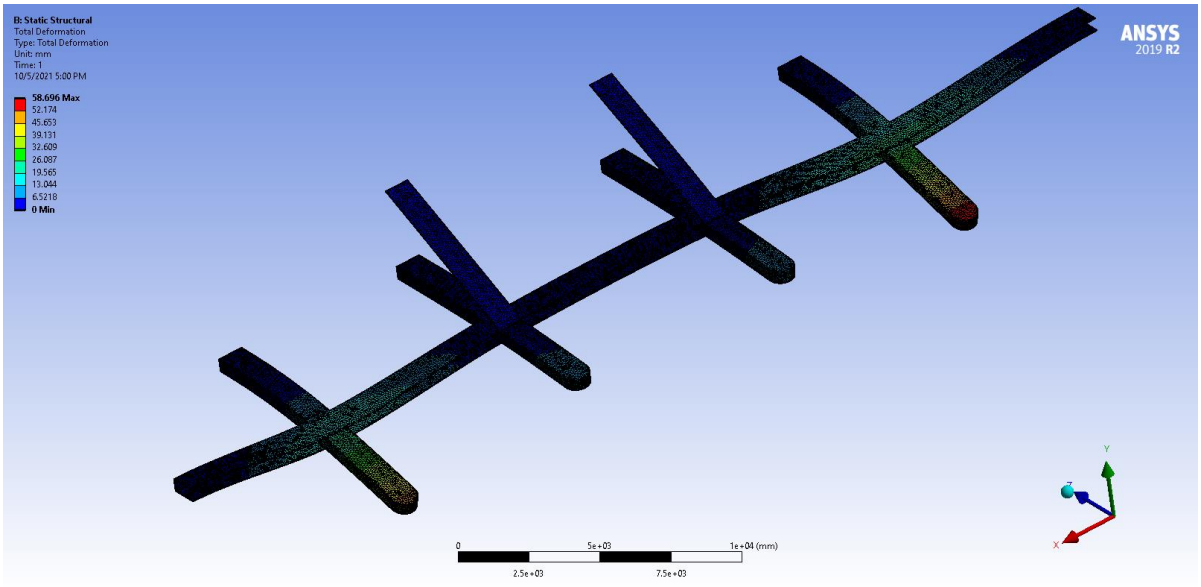

Figure 6.6: Maximum deformation on the structure.

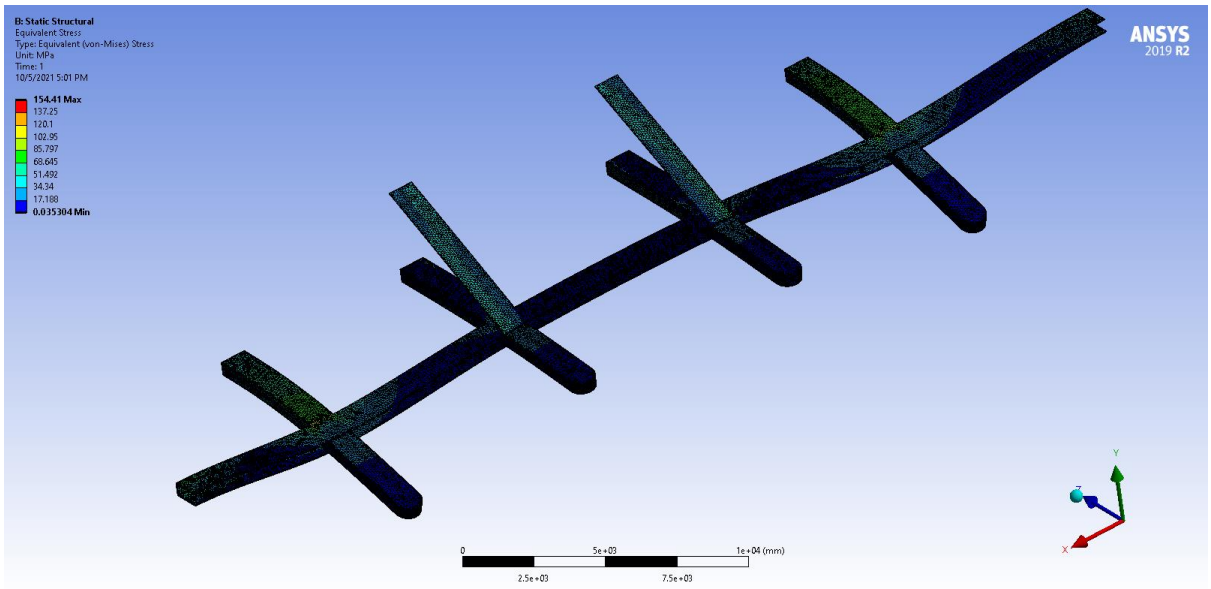

Figure 6.7: Von Misses stresses on the structure.

6.3 Discussion

The launching mechanism is hydraulic and with easy launching of the MEV. Two holding beams are placing the MEV-In position for loading the passengers and when full, lowering to the sea. Once the MEV-Is on the surface of the sea the inflatables will be inflated. The process is clearly indicated in Figure 6.2.

In terms of design of the launching structure, analysis shows that, by using AH36 steel and the design showcased in the previous sections, it can serve as the launching mechanism for the MEV-I. The deformations are well within acceptable parameters (58 mm) and the maximum Von Misses stresses are of the order of 154 MPa, which is well below the Yield

strength of AH36 (365 MPa). If we consider a SF (Safety Factor) of 1.5, the maximum Von Misses stress (231 MPa) is again well below the AH36 yield strength.

7 MEV-I demo

7.1 Description

The MEV-I demo is a scaled down version of the MEV-I and will be manufactured by ASTANDER and tested at its premises. The MEV-I demo is scaled down to accommodate 30 persons, with one door access into the vessel. It will be manufactured by bio-composites as described in D4.1 and previous section. The weights of navigation equipment, engine have been assessed in the design of the MEV-I demo.

The main Particulars of MEV-I demo (Figure 7.1) are shown below:

L = 5 m

B = 4 m

D = 2 m

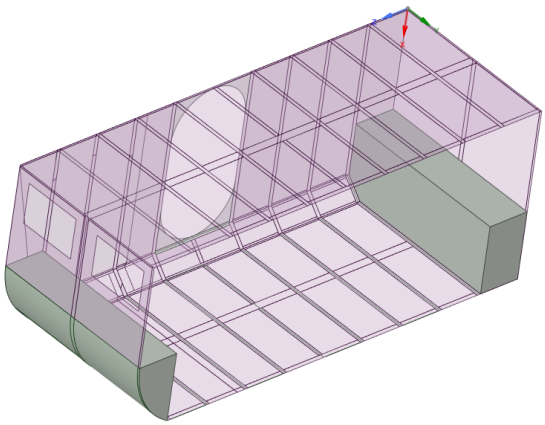

Figure 7.1: MEV-I demo symmetrical structure.

The weight groups imposed as boundary conditions in the numerical simulation are:

e) Weight of structure 3.8 tn.
f) Weight of 30 passengers (4 tn, with SF).
g) Weight (front section) of navigation equipment = 400 kg.
h) Weight of engine = 1 tn.

Three loading cases were simulated, considering fully loaded condition (all 30 passengers on board, Navigation and engine weight, same as Section 5:

d) The MEV-I demo on sagging condition (is supported by the crest of waves, fore and aft).
e) The MEV-I demo supported on the inflatables (crest of waves in the inflatables)
f) Launching condition; the MEV-I demo supported by the two attachment points, for launching at the top of the structure.

7.2 Design and analysis

The analysis was linear elastic, using an orthotropic material model for the bio-composites with properties shown in Section 4. For the sandwich structure, honeycomb material model was used with properties shown in Section 4.

For the structural analysis, the following parameters were evaluated as well as three failure criteria:

vi) Max Stress
vii) Max deformation
viii) Composite Failure Criteria
ix) Tsai Wu Failure Criteria
x) Puck Failure criteria

The results for the 3 loading cases are depicted below:

a) <u>Fixed supports on fore and aft end of MEV (being supported by two waves fore and aft)</u>

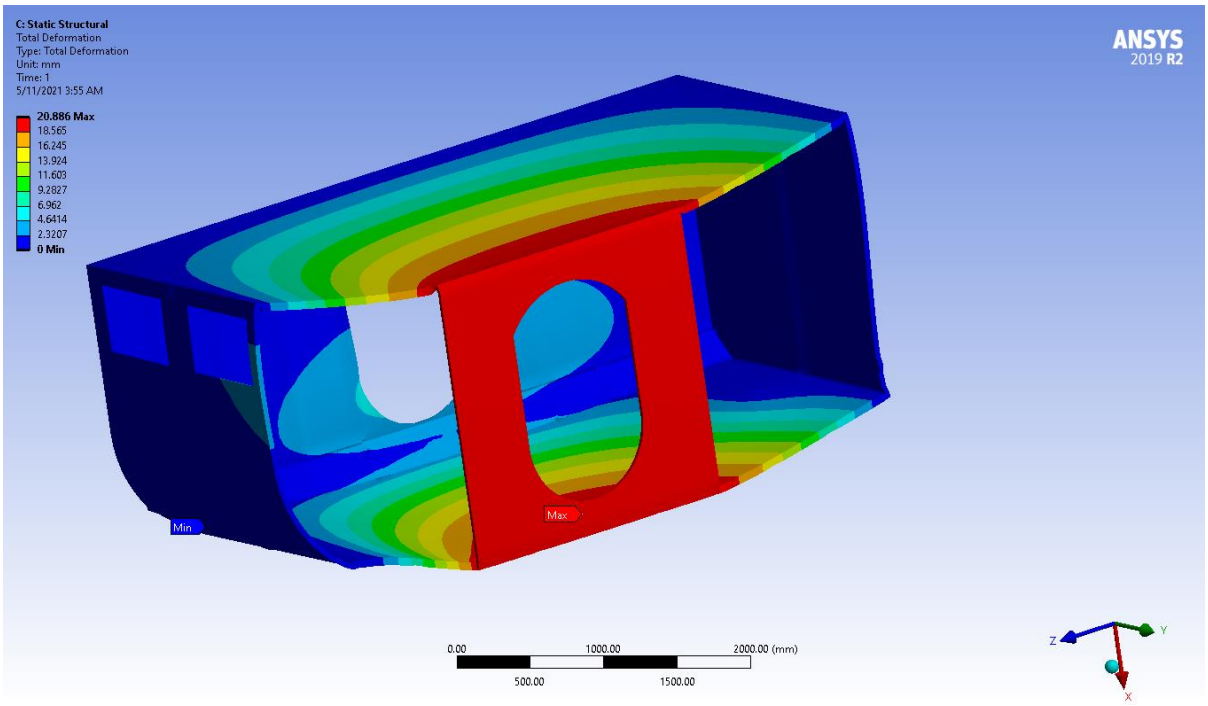

Figure 7.2: MEV-I demo Deformation (mm).

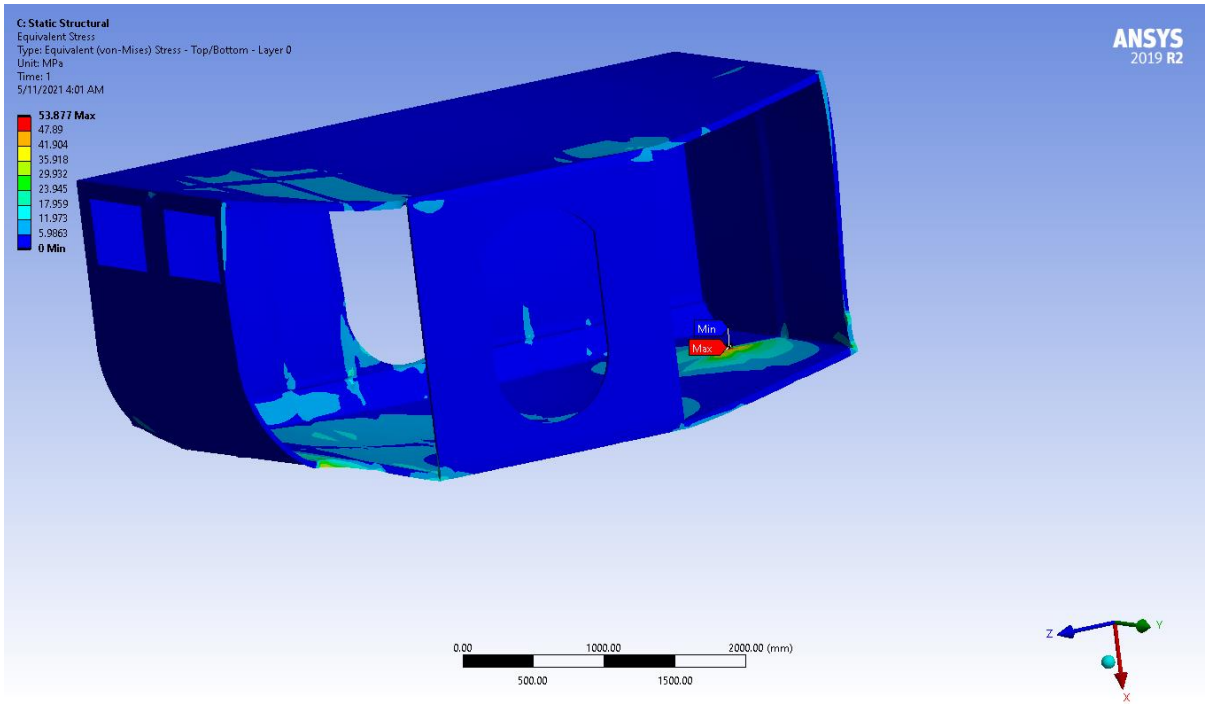

Figure 7.3: MEV-I demo Equivalent Stress.

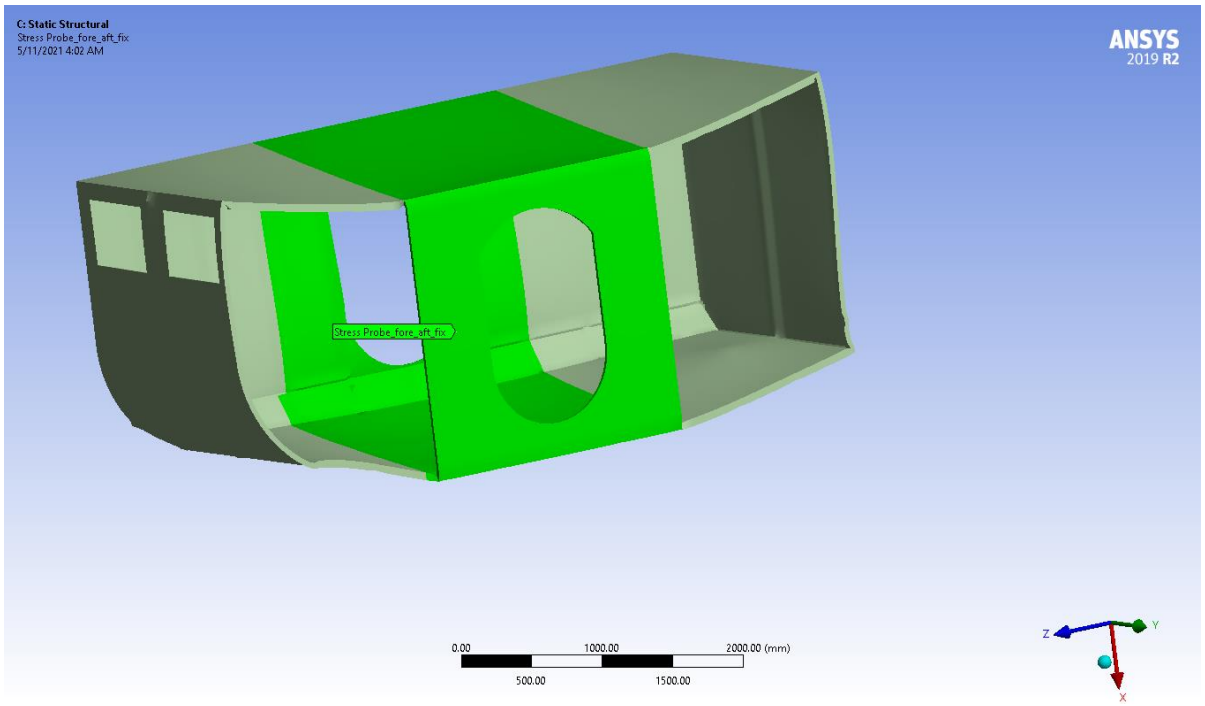

Figure 7.4: MEV-I demo Max stress probe on mid-section σ= 31 MPa.

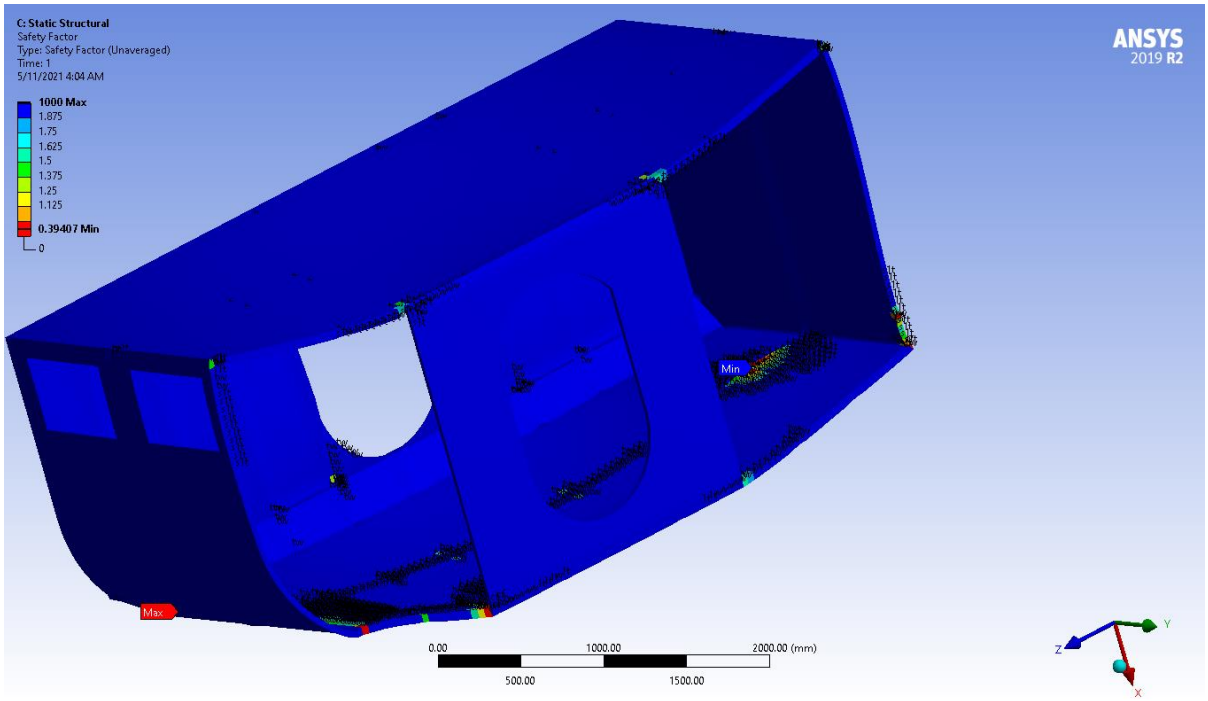

Figure 7.5: MEV-I demo Safety factor on structure (Max stresses on support and stress concentration areas-mesh dependent).

b) <u>Fixed supports on sides of MEV (being supported by the two inflatables)</u>

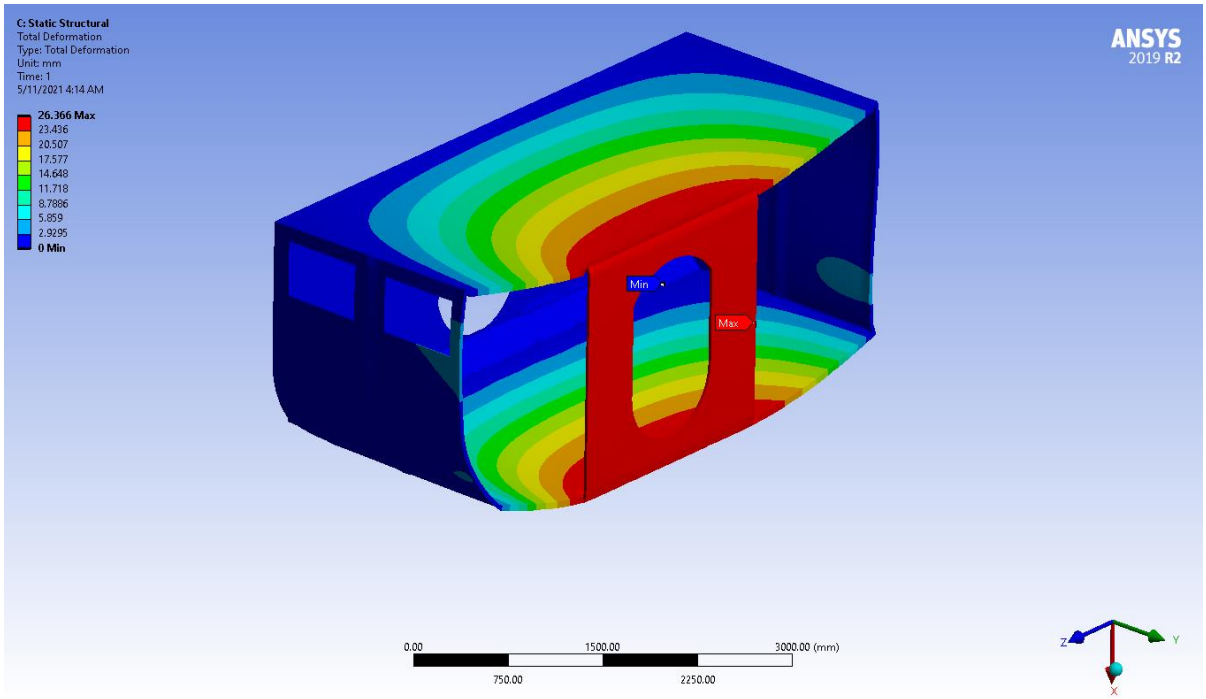

Figure 7.6: MEV-I demo Deformation (mm).

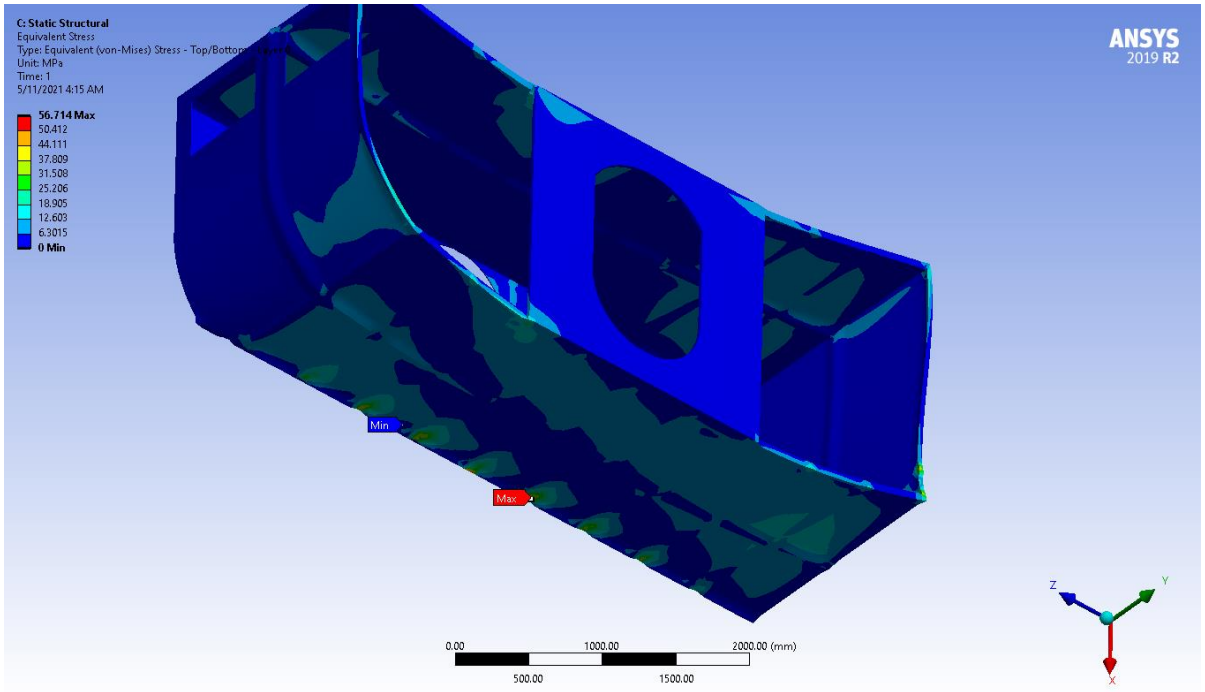

Figure 7.7: MEV-I demo Equivalent Stress.

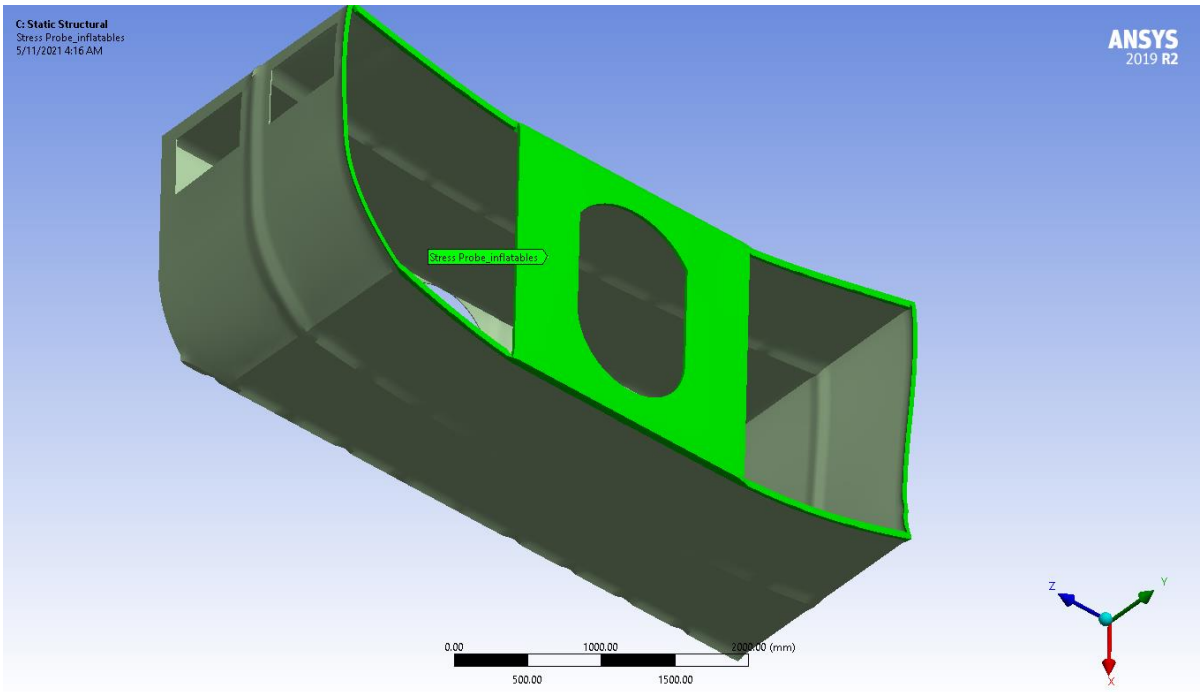

Figure 7.8: MEV-I demo Max stress probe on mid section σ= 43 MPa.

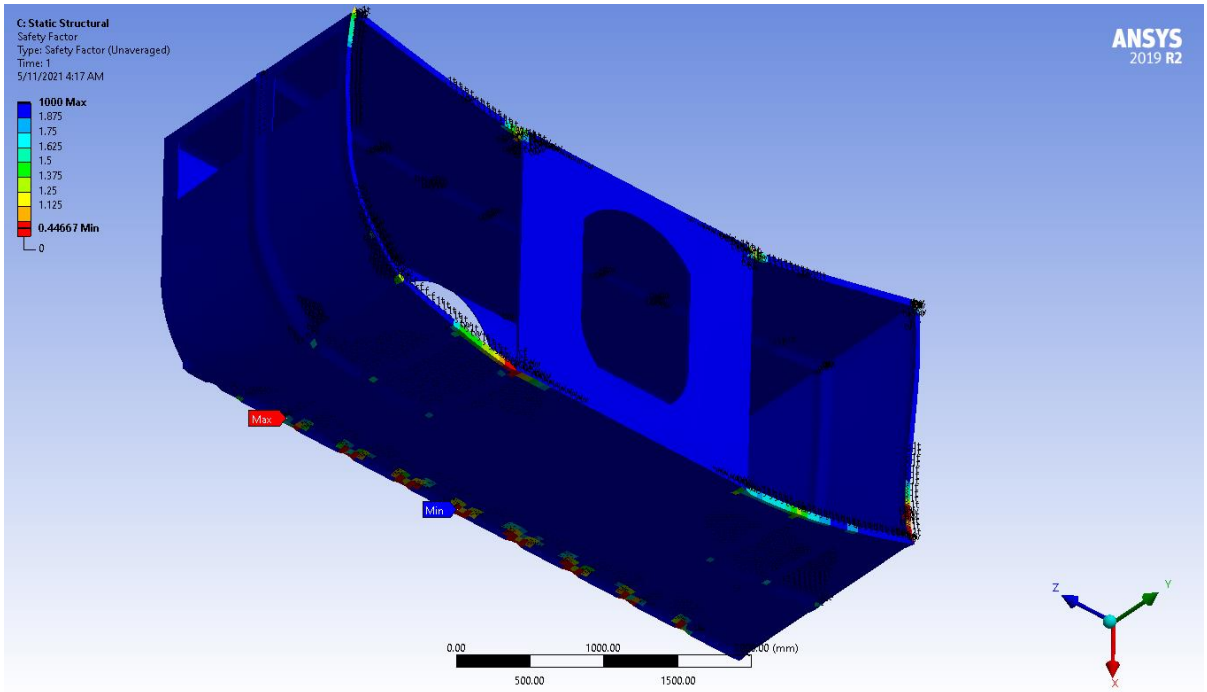

Figure 7.9: MEV-I demo Safety factor on structure (Max stresses on support and stress concentration areas-mesh dependent).

c) <u>Fixed supports on top (being supported by launching ropes)</u>

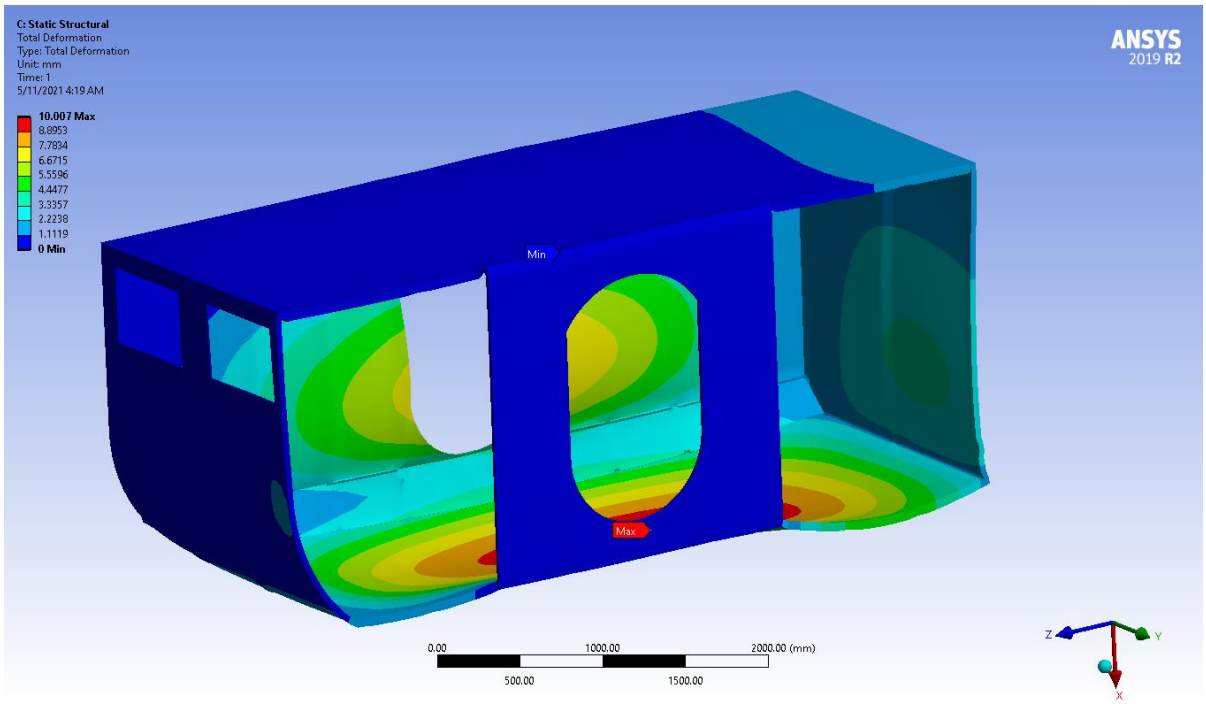

Figure 7.10: MEV-I demo Deformation (mm).

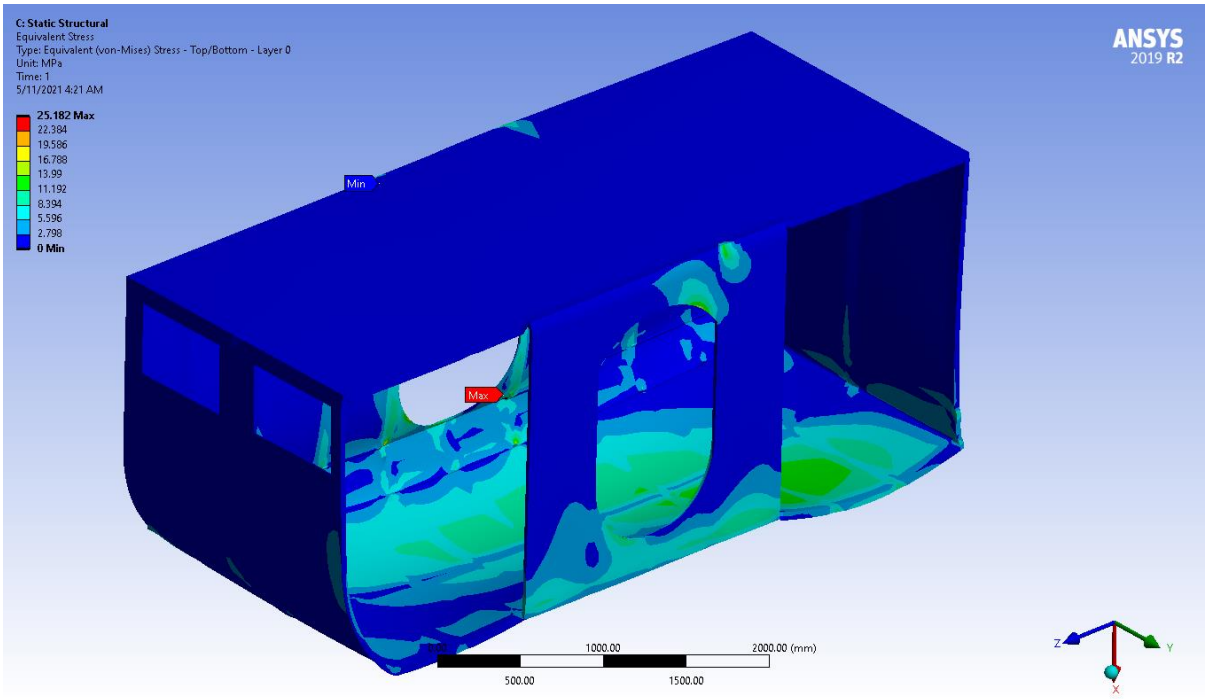

Figure 7.11: MEV-I demo Equivalent Stress.

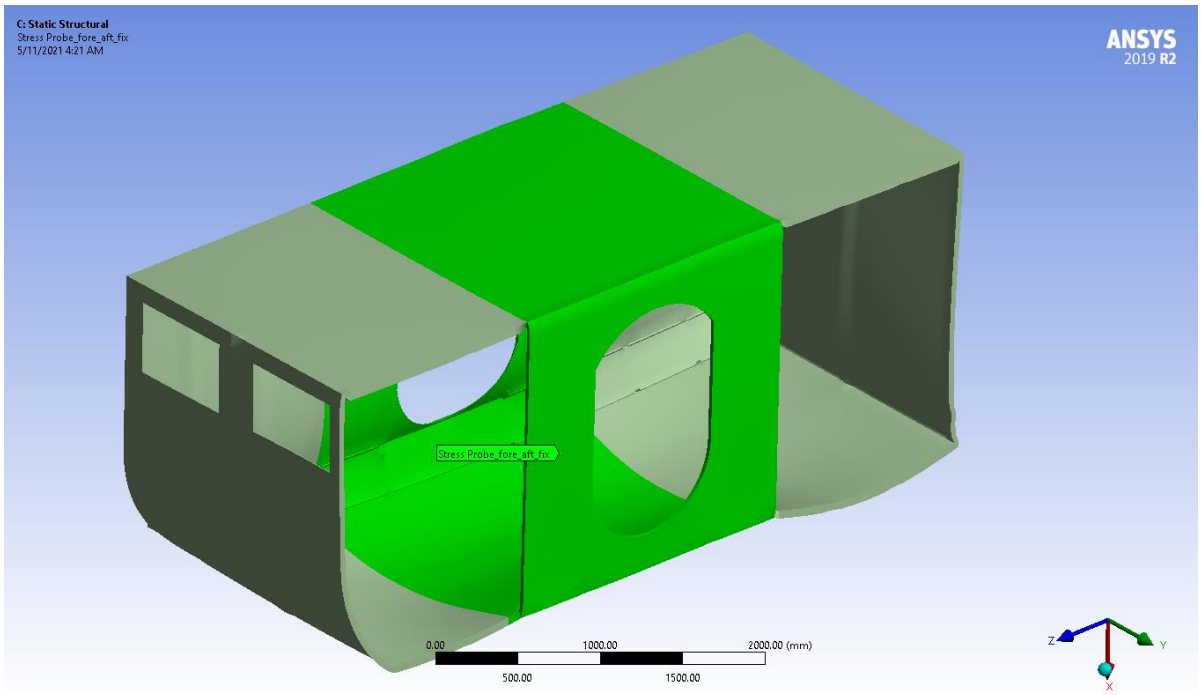

Figure 7.12: MEV-I demo Max stress probe on mid-section σ= 25 MPa.

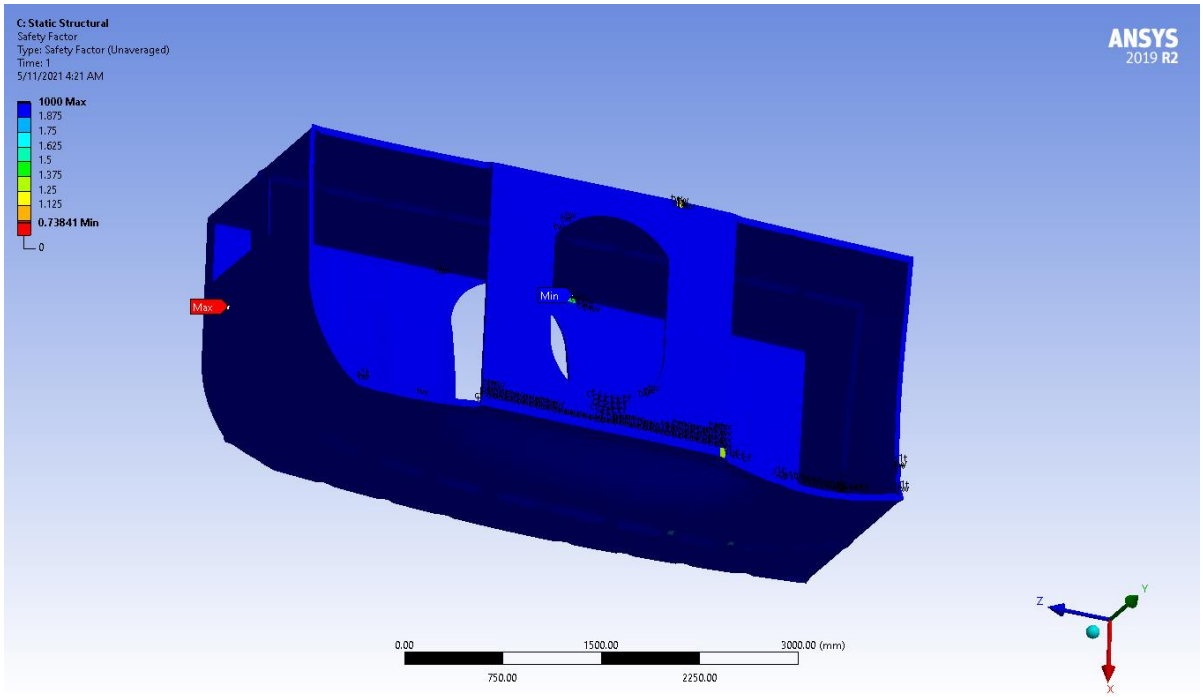

Figure 7.13: MEV-I demo Safety factor on structure (Max stresses on support and stress concentration areas-mesh dependent).

7.3 Structural drawings

The structural drawings as well as the layers and sequence of the bio-composite panels are depicted below. The MEV designs are shown only half due to symmetry of the vehicle on the CL.

Outer skin (all plating)

8 layers +- 45 degrees with respect to the Coordinate system, where (X, y) plane is tangent on each side

Top – bottom sandwich structures

Orientations are displayed with respect to the Coordinate system, where (X, y) plane is tangent on each side.

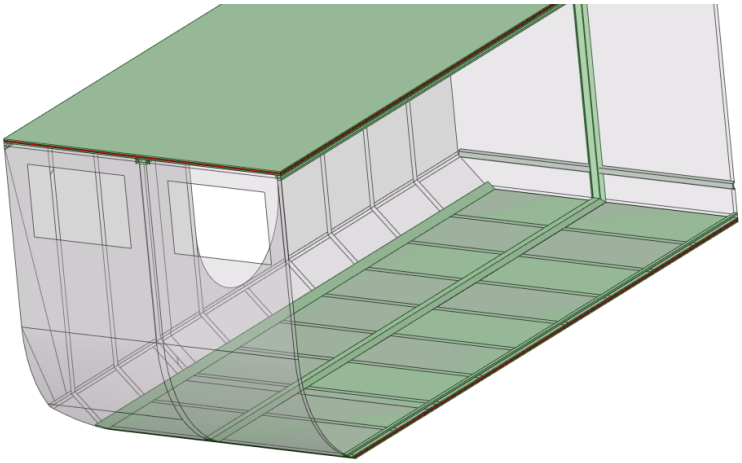

Figure 7.14: Top bottom sandwich structures.

LAYERS	ORIENTATION	MATERIAL	THICKNESS
1	45	Flax	1
2	-45	Flax	1
3	45	Flax	1
4	-45	Flax	1
5	45	Flax	1
6	-45	Flax	1
7	45	Flax	1
8	-45	Flax	1
9	0	honecomp	10
10	45	Flax	1
11	-45	Flax	1
12	45	Flax	1
13	-45	Flax	1
14	45	Flax	1
15	-45	Flax	1
16	45	Flax	1
17	-45	Flax	1

Transverse stiffeners

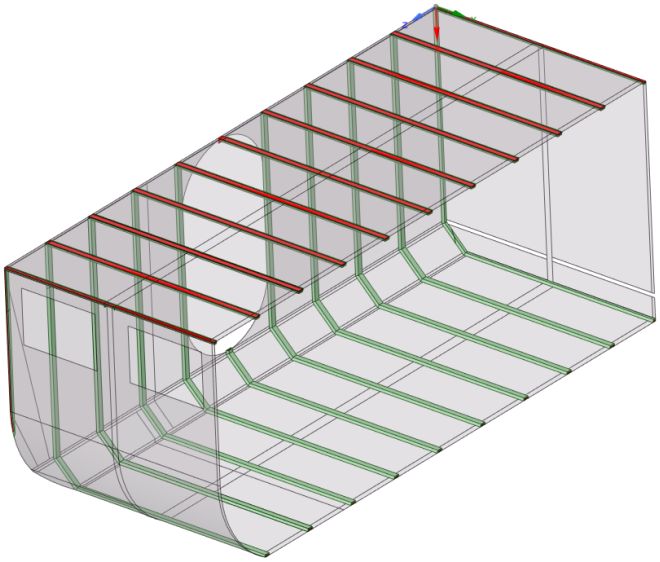

Figure 7.15: Transverse stiffeners.

Transverse stiffeners have the structure and dimensions, illustrated in the Figure 7.16. Orientations are displayed with respect to the Local Coordinate system of the stiffeners, where the local (x, y) plane is tangential to the plane of the transversal stiffeners (x parallel on the direction of the stiffener and y vertical). In other words, O angle (x direction) is the direction of the length of the stiffener.

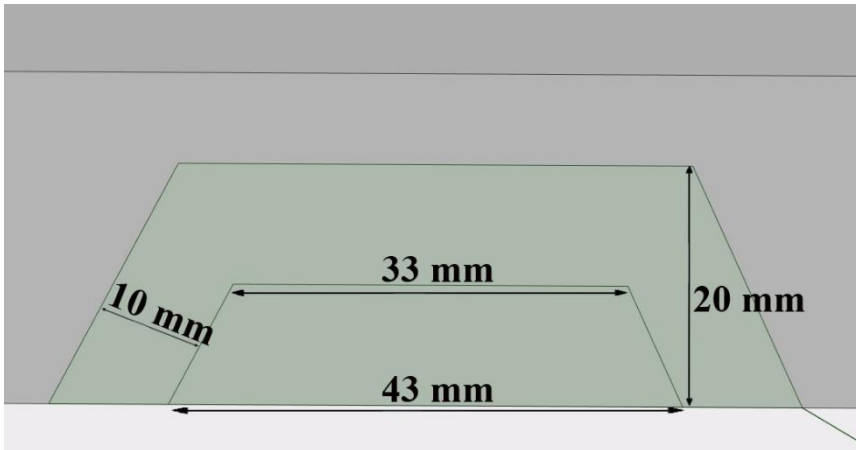

Figure 7.16: Transverse stiffeners dimensions.

TRANSVERSE STIFFENERS

LAYERS	Orientation	material	thickness
1	45	Flax	1
2	-45	Flax	1
3	45	Flax	1
4	-45	Flax	1
5	45	Flax	1
6	-45	Flax	1
7	45	Flax	1
8	-45	Flax	1
9	45	Flax	1
10	-45	Flax	1
11	0	honecomp	10

Longitudinal stiffeners

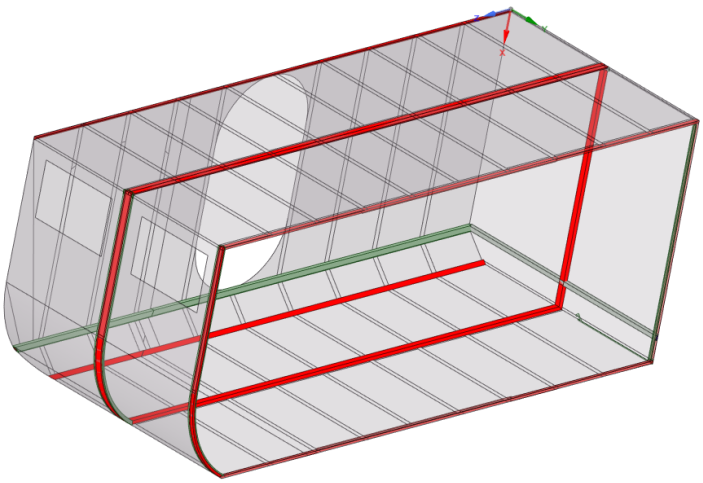

Figure 7.17: Longitudinal stiffeners.

Longitudinal stiffeners have the structure and dimensions, illustrated in the Figure 7.18. Orientations are displayed with respect to the Local Coordinate system of the stiffeners, where the local (x, y) plane is tangential to the plane of the transversal stiffeners (x parallel on the direction of the stiffener and y vertical). In other words, O angle (x direction) is the direction of the length of the stiffener.

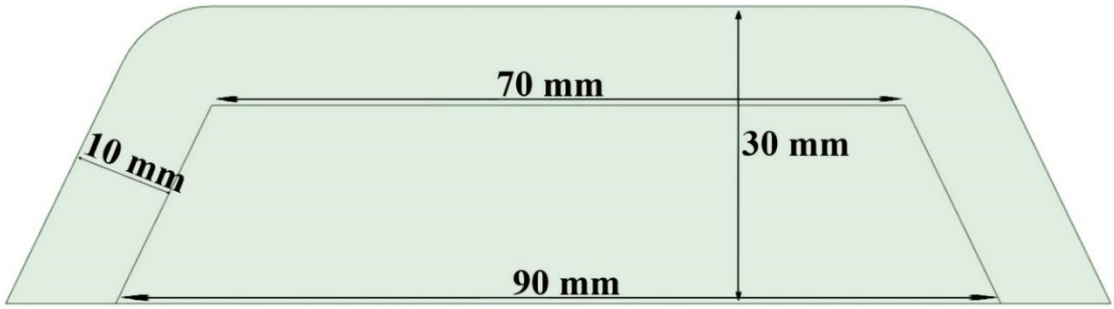

Figure 7.18: Longitudinal stiffeners dimensions.

LONGITUDINAL STIFFENERS

LAYERS	Orientation	material	thickness
1	45	Flax	1
2	-45	Flax	1
3	0	Flax	1
4	0	Flax	1
5	0	Flax	1
6	0	Flax	1
7	0	Flax	1
8	0	Flax	1
9	45	Flax	1
10	-45	Flax	1
11	0	honeycomb	20

(O is the direction of the length of the stiffener)

Middle wall

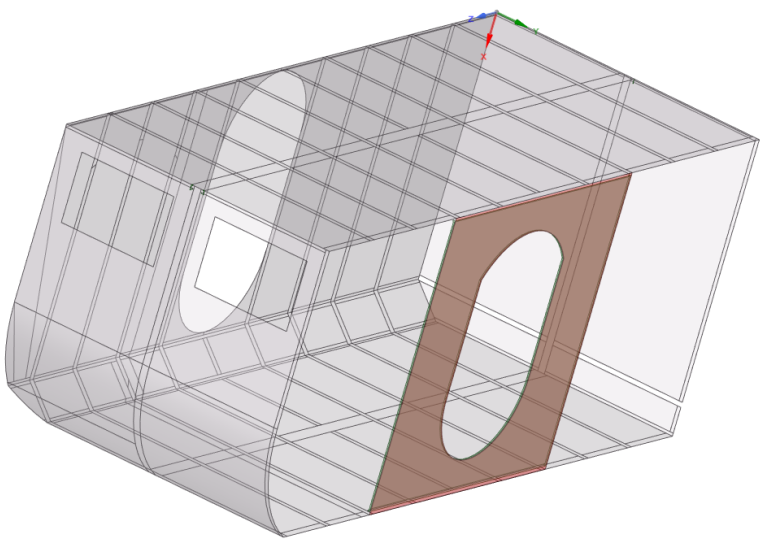

Figure 7.19: Middle wall sandwich structures.

The middle wall sandwich structure (The plane of the fibers is the Z, X in the figure and the direction of the fibers at 90 degrees is the X direction.

MIDDLE WALL			
LAYERS	Orientation	material	thickness
1	45	Flax	1
2	-45	Flax	1
3	90	Flax	1
4	90	Flax	1
5	90	Flax	1
6	90	Flax	1
7	45	Flax	1
8	-45	Flax	1
9	0	honecomp	10
10	45	Flax	1
11	-45	Flax	1
12	90	Flax	1
13	90	Flax	1
14	90	Flax	1
15	90	Flax	1
16	45	Flax	1
17	-45	Flax	1

7.4 Seating arrangement

The Seating arrangement has been calculated for 30 people. Although precise interior design will be done in T4.4, an initial estimation of the maximum allowable persons in the MEV has been assessed in this Task. The seating space is according to rules and guidelines described in D4.1. The seating arrangement has been arranged at the edge of port and stbd sides and in the middle. T

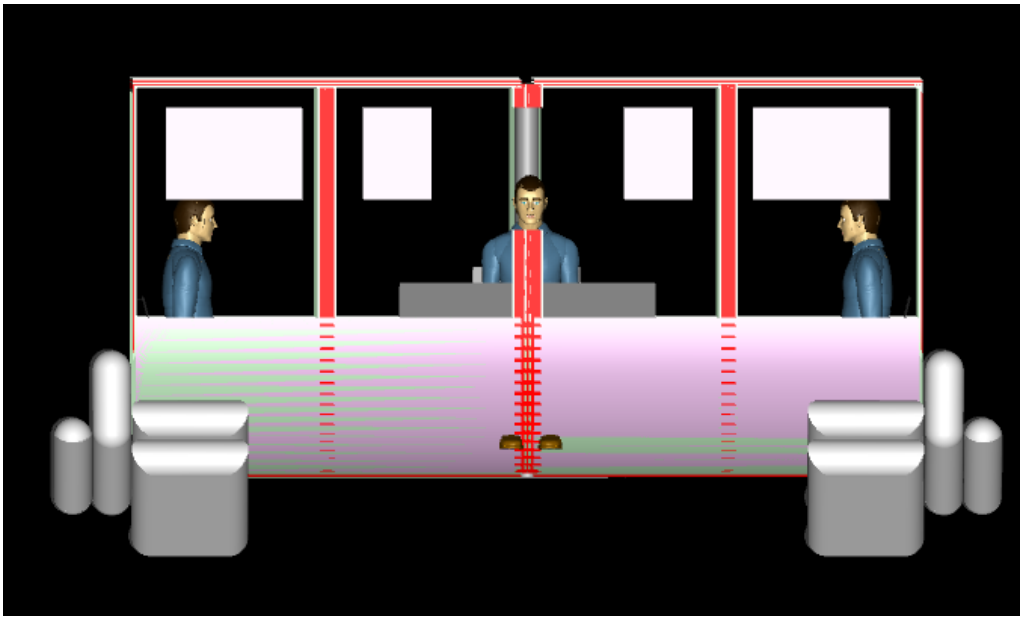

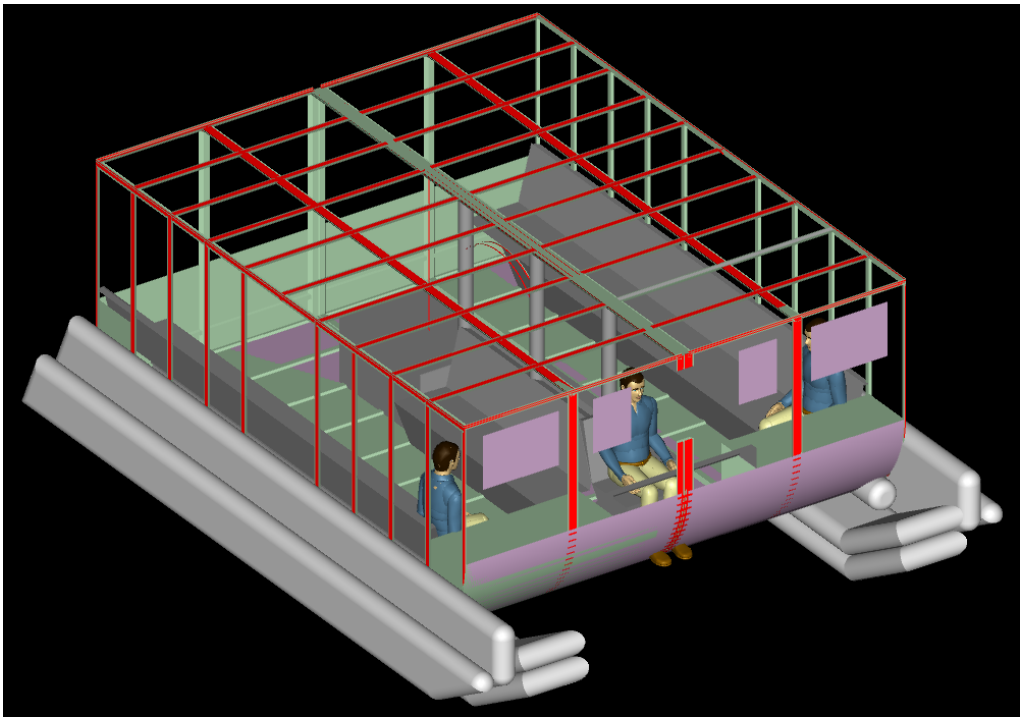

Figure 7.20: Interior design and seating arrangement of MEV-I demo.

7.5 Stability assessment

This Section presents the main hydrostatic particulars as well as the preliminary stability calculations for MEV-I demo.

7.5.1 Hydrostatic particulars

The hydrostatic particulars of MEV-I demo for the both conditions, i.e. with and without the inflatables to be deployed are presented.

7.5.1.1 Without inflatables

Hydrostatic Table

Draft	Disp	LCB	VCB	LCF	KM_L	KM_T	BM_L	BM_T	TPC	MTC	WSA	WPA
m	t	m	m	m	m	m	m	m	t/cm	t·m/cm	m^2	m^2
0.10	1.54	2.280	0.051	2.317	18.787	10.138	18.736	10.087	0.16	0.06	16.56	15.75
0.20	3.23	2.315	0.103	2.372	10.286	5.965	10.183	5.862	0.18	0.07	18.76	17.08
0.30	5.04	2.343	0.156	2.413	7.394	4.643	7.238	4.487	0.19	0.07	20.96	18.34
0.40	6.98	2.367	0.210	2.445	5.930	4.038	5.720	3.827	0.20	0.08	23.19	19.56
0.50	9.00	2.387	0.264	2.468	4.830	3.262	4.566	2.998	0.20	0.08	25.01	19.74
0.60	11.03	2.404	0.317	2.484	4.117	2.779	3.800	2.463	0.20	0.08	26.82	19.88
0.70	13.07	2.417	0.369	2.495	3.615	2.455	3.247	2.087	0.20	0.08	28.63	19.96
0.80	15.12	2.428	0.420	2.500	3.244	2.228	2.823	1.808	0.20	0.09	30.43	20.00

Draft	Disp	LCB	VCB	LCF	KM_L	KM_T	BM_L	BM_T	TPC	MTC	WSA	WPA
m	t	m	m	m	m	m	m	m	t/cm	t·m/cm	m^2	m^2
0.90	17.17	2.437	0.472	2.500	2.959	2.064	2.487	1.592	0.20	0.09	32.23	20.00
1.00	19.22	2.444	0.523	2.500	2.745	1.945	2.222	1.422	0.20	0.09	34.03	20.00
1.10	21.27	2.449	0.573	2.500	2.581	1.859	2.008	1.285	0.20	0.09	35.83	20.00
1.20	23.32	2.453	0.624	2.500	2.456	1.796	1.831	1.172	0.20	0.09	37.63	20.00
1.30	25.37	2.457	0.675	2.500	2.358	1.752	1.683	1.077	0.20	0.09	39.43	20.00
1.40	27.42	2.460	0.725	2.500	2.283	1.722	1.558	0.997	0.21	0.09	41.23	20.00
1.50	29.47	2.463	0.776	2.500	2.225	1.703	1.449	0.928	0.20	0.09	43.03	20.00

Cross Curves

The Table below provides the KN values for each draft and angle of heel respectively.

Heel	10º	20º	30º	40º	50º	60º	70º	80º	90º
Draft									
0.10	1.155	1.407	1.468	1.450	1.379	1.276	1.175	1.159	1.155
0.20	0.954	1.283	1.402	1.431	1.405	1.347	1.294	1.227	1.111
0.30	0.770	1.174	1.341	1.411	1.426	1.408	1.356	1.239	1.074
0.40	0.631	1.073	1.284	1.394	1.445	1.447	1.372	1.236	1.055
0.50	0.541	0.981	1.233	1.377	1.457	1.450	1.367	1.227	1.044
0.60	0.479	0.897	1.185	1.363	1.447	1.433	1.351	1.215	1.037
0.70	0.430	0.825	1.141	1.342	1.419	1.407	1.329	1.201	1.032
0.80	0.391	0.770	1.100	1.308	1.382	1.373	1.304	1.186	1.029
0.90	0.362	0.727	1.062	1.263	1.337	1.336	1.277	1.171	1.026
1.00	0.342	0.693	1.018	1.211	1.289	1.296	1.249	1.156	1.024
1.10	0.326	0.664	0.972	1.154	1.237	1.254	1.219	1.140	1.025
1.20	0.315	0.641	0.923	1.093	1.183	1.210	1.188	1.124	1.023
1.30	0.307	0.623	0.874	1.032	1.127	1.165	1.157	1.108	1.022
1.40	0.302	0.602	0.823	0.972	1.069	1.119	1.125	1.091	1.022
1.50	0.298	0.576	0.771	0.914	1.013	1.073	1.092	1.074	1.021

7.5.1.2 With inflatables

Hydrostatic Table

Draft	Disp	LCB	VCB	LCF	KM_L	KM_T	BM_L	BM_T	TPC	MTC	WSA	WPA
m	t	m	m	m	m	m	m	m	t/cm	t·m/cm	m^2	m^2
0.10	0.65	2.306	0.052	2.335	30.809	32.098	30.756	32.046	0.07	0.04	8.34	6.96
0.20	1.32	2.352	0.101	2.569	11.612	11.339	11.511	11.238	0.05	0.03	12.38	4.98
0.30	2.38	2.385	0.169	2.450	15.651	19.024	15.482	18.854	0.12	0.07	24.11	11.96
0.40	3.57	2.430	0.229	2.640	9.602	11.602	9.373	11.373	0.11	0.07	47.30	10.40
0.50	5.88	2.444	0.316	2.488	9.770	8.814	9.453	8.498	0.24	0.11	54.92	23.60
0.60	8.34	2.459	0.385	2.503	7.121	6.449	6.735	6.063	0.25	0.11	61.65	24.09
0.70	10.69	2.471	0.443	2.503	4.899	3.678	4.456	3.235	0.22	0.10	72.56	21.08
0.80	12.89	2.475	0.496	2.488	4.218	3.423	3.722	2.928	0.23	0.10	77.68	21.99
0.90	15.16	2.479	0.549	2.510	3.779	3.050	3.230	2.502	0.23	0.10	80.02	22.16
1.00	17.43	2.484	0.601	2.519	3.372	2.676	2.771	2.075	0.22	0.10	83.50	21.86
1.10	19.53	2.486	0.649	2.495	2.822	2.046	2.173	1.396	0.20	0.08	87.67	19.96
1.20	21.58	2.487	0.697	2.500	2.675	1.963	1.978	1.266	0.20	0.09	89.47	20.00
1.30	23.63	2.488	0.745	2.500	2.552	1.901	1.807	1.157	0.20	0.09	91.27	20.00
1.40	25.68	2.489	0.793	2.500	2.456	1.857	1.663	1.064	0.20	0.09	93.07	20.00
1.50	27.73	2.490	0.842	2.500	2.382	1.827	1.540	0.986	0.20	0.09	94.87	20.00

Cross Curves

The Table below provides the KN values for each draft and angle of heel respectively.

Heel	10º	20º	30º	40º	50º	60º	70º	80º	90º
Draft									
0.10	1.777	1.848	1.884	1.821	1.673	1.471	1.174	0.831	0.480
0.20	1.859	1.872	1.851	1.773	1.620	1.398	1.146	0.871	0.569
0.30	1.899	1.900	1.839	1.721	1.566	1.374	1.138	0.883	0.811
0.40	1.742	1.873	1.841	1.735	1.575	1.375	1.156	0.985	0.934
0.50	1.270	1.732	1.765	1.723	1.622	1.482	1.315	1.164	1.033
0.60	0.991	1.553	1.671	1.698	1.665	1.588	1.466	1.288	1.082
0.70	0.761	1.347	1.596	1.677	1.695	1.654	1.536	1.358	1.142
0.80	0.619	1.179	1.534	1.659	1.712	1.675	1.565	1.395	1.189
0.90	0.513	1.049	1.467	1.641	1.704	1.675	1.575	1.415	1.226
1.00	0.441	0.944	1.384	1.613	1.679	1.660	1.573	1.432	1.251
1.10	0.395	0.862	1.304	1.574	1.646	1.637	1.563	1.436	1.266
1.20	0.366	0.795	1.235	1.527	1.608	1.610	1.549	1.436	1.276
1.30	0.343	0.744	1.177	1.461	1.565	1.578	1.531	1.432	1.280
1.40	0.326	0.706	1.123	1.384	1.518	1.543	1.511	1.427	1.297
1.50	0.320	0.674	1.063	1.307	1.460	1.506	1.488	1.419	1.306

7.5.2 Weight Analysis

This section analyses the calculations that were conducted for the weight groups of MEV-I real scale to estimate the LCG, TCG and KG. Furthermore, the loading conditions of MEV-I (i.e. without and with the inflatables) are presented.

The weight groups that were calculated are the following:

- Lightweight
  - Structure
  - Inflatables
  - Outfitting
  - Engine
  - Equipment
- Deadweight
  - Passengers
  - Fuel
  - Provisions
    - Water
    - Food

Each weight group is analysed below.

7.5.2.1 Lightship

Structure

The weight of the structure is estimated 3.80 tn. The MEV-I is symmetrical in regards to the center plane, therefore TCG will be located on the CL. The weight of the structure is assumed to be equally distributed through the length of the MEV-I, hence the LCG is assumed that is located at 2.50 m from the stern. Finally, the VCG because of the windows and that the bottom of MEV-I has more stiffeners compared to the top, VCG is assumed at 1.80 m from the BL.

Group	Weight	LCG	TCG	VCG	AFT ext.	FOR. ext.
	(tn)	(m)	(m)	(m)	(m from AP)	
Structure	3.800	2.500	0.000	1.800	0.000	5.000

Inflatables

The weight of the inflatables is calculated at 0.352 tn. For the inflatables two different conditions were analysed: 1) when they are stored in the tube; and 2) when they are inflated. In both conditions the weight is considered that is distributed equally through the length.

Regarding the center of gravity, for the condition 1, LCG was assumed at 2.50 m from the stern, TCG on the CL and VCG at 0.25 form the BL. For condition 2, the center of gravity was calculate based on the geometric center of the inflatables when they are inflated, i.e. LCG at 2.625 m from the stern, TCG on the CL and VCG at 0.448 m from the bottom of the inflatables.

Group	Weight	LCG	TCG	VCG	AFT ext.	FOR. ext.
	(tn)	(m)	(m)	(m)	(m from AP)	
Inflatables 1	0.352	2.500	0.000	0.250	0.000	5.000
Inflatables 2	0.352	2.625	0.000	0.448	-0.618	5.900

Outfitting

This weight group includes all the equipment (i.e. navigational, electrical, antennas, etc.), pipping (fuel, cooling water, air conditioning, etc.), appendages (e.g. propeller, etc.), air conditioning pumps, lights and the respective cables, etc. that will be installed on the MEV-I.

The weight is estimated at 1.00 tn. The center of gravity is estimated at LCG 2.300 m from the stern (because the propeller and the rest of the appendages regarding the engine are located towards the stern), TCG on the CL and VCG at 1.30 m above BL.

Group	Weight	LCG	TCG	VCG	AFT ext.	FOR. ext.
	(tn)	(m)	(m)	(m)	(m from AP)	
Outfitting	1.000	2.300	0.000	1.300	0.000	5.000

Engine

The weight of the main engine is estimated at 0.60 tn. The center of gravity for the main engine is located on the geometric center of the respective space, because the engine will be located on the CL. Therefore, the LCG is located at 0.239 m from the stern, TCG on the CL, and VCG 0.414 m form the BL.

Group	Weight	LCG	TCG	VCG	AFT ext.	FOR. ext.
	(tn)	(m)	(m)	(m)	(m from AP)	
Engine	0.60	0.239	0.000	0.414	0.000	0.478

Equipment

This weight group includes all the equipment required by LSA Code[7], excluding the food and water supplies, that are required on the MEV-I. The weight of this equipment is estimated 100 Kg (0.10 tn), and it will be stored in the forward area of the MEV-I model.

Group	Weight	LCG	TCG	VCG	AFT ext.	FOR. ext.
	(tn)	(m)	(m)	(m)	(m from AP)	
Equipment	0.100	4.717	0.000	0.505	4.522	5.000

7.5.2.2 Deadweight

Persons on-board

MEV-I model is designed to have on-board 38 passengers and 2 crew members. Therefore, 40 persons in total will be on-board. The average weight of each person is assumed 0.10 tn (100 Kg) per person, i.e. 4.00 tn in total. According to the seating arrangement the weight in equally distributed and the passengers are seated symmetrically from the CL, therefore the LCG is located at 2.518 m from the stern and the TCG on the CL. Regarding the VCG, it is assumed an average height of 1.70 m and that the center of gravity of a seating person is located at half of each height. Hence the VCG is located at 0.85 m above BL.

Group	Weight	LCG	TCG	VCG	AFT ext.	FOR. ext.
	(tn)	(m)	(m)	(m)	(m from AP)	
Passengers	4.00	2.518	0.000	0.850	0.898	4.168

[7] Ch. IV, § 4.4.8

Fuel

The fuel tanks will be located in the stern of the MEV-I close to the engine. They will be two symmetric tanks (one port and one starboard).

Group	Weight	LCG	TCG	VCG	AFT ext.	FOR. ext.
	(tn)	(m)	(m)	(m)	(m from AP)	
Fuel	0.300	0.239	0.000	0.414	0.000	0.478

Provisions

This weight group includes the water and food supplies that MEV-I should carry according to the maximum capacity of the passengers. According to LSA Code, for person on-board it is required 3 lt of water[8] and food that provides 10000 kJ (i.e. 2400 kCal) per person[9].

To calculate the required weight of the water supplies 40 persons are considered on-board consuming 3 lt for two days (1.5lt per day). By adding a safety factor of 25%, therefore the water weight is calculated at 0.150 tn.

Regarding the food weight, 2 packs per person (one per day) is required. According to LSA and indicatively the weight of each pack is 0.55 gr. By adding a safety factor of 25%, therefore the food weight is calculated at 0.055 tn.

The water and food supplies is assumed to be located beneath the seats. Therefore, the LCG for both supplies will be the same. LCG will be located at 2.518 m from the stern, TCG on the CL and the VCG at 0.400 m above the BL.

It is noted that the free surface moment effect from the water supplies is neglected because it should be in specific packs according to LSA Code.

Group	Weight	LCG	TCG	VCG	AFT ext.	FOR. ext.
	(tn)	(m)	(m)	(m)	(m from AP)	
Water	0.150	2.518	0.000	0.400	0.898	4.168
Food	0.055	2.518	0.000	0.400	0.898	4.168
Total Provisions	0.205	2.518	0.000	0.400	0.898	4.168

7.5.3 Total weights groups without inflatables

Main group	Group	Weight	LCG	TCG	VCG	AFT ext.	FOR. ext.
		(tn)	(m)	(m)	(m)	(m from AP)	
Lightship	Structure	3.800	2.500	0.000	1.800	0.000	5.000
	Inflatables 1	0.352	2.500	0.000	0.250	0.000	5.000
	Outfitting	1.000	2.300	0.000	2.000	0.000	5.000
	Engine	0.600	0.239	0.000	0.414	0.000	0.478
	Equipment	0.100	4.717	0.000	0.505	4.522	5.000
	Total (LS)	**5.852**	**2.272**	**0.000**	**1.458**	**0.000**	**5.000**

[8] Ch. IV, § 4.4.8.9
[9] Ch. IV, § 4.4.8.12

Main group	Group	Weight	LCG	TCG	VCG	AFT ext.	FOR. ext.
		(tn)	(m)	(m)	(m)	(m from AP)	
Load	Persons	4.000	2.518	0.000	0.850	0.898	4.168
	Fuel FLD	0.400	0.239	0.000	0.414	0.000	0.478
	Fuel FLA	0.040	0.239	0.000	0.414	0.000	0.478
	Provisions FLD	0.205	2.518	0.000	0.400	0.898	4.168
	Provisions FLA	0.021	2.518	0.000	0.400	0.898	4.168

7.5.4 Total weights groups with inflatables

Main group	Group	Weight	LCG	TCG	VCG	AFT ext.	FOR. ext.
		(tn)	(m)	(m)	(m)	(m from AP)	
Lightship	Structure	3.800	2.500	0.000	2.200	0.000	5.000
	Inflatables 2	0.352	2.625	0.000	0.448	-0.618	5.900
	Outfitting	1.000	2.300	0.000	2.000	0.000	5.000
	Engine	0.600	0.239	0.000	0.414	0.000	0.478
	Equipment	0.100	4.717	0.000	0.905	4.522	5.000
	Total (LS)	**5.852**	**2.279**	**0.000**	**1.845**	**-0.618**	**5.900**

Main group	Group	Weight	LCG	TCG	VCG	AFT ext.	FOR. ext.
		(tn)	(m)	(m)	(m)	(m from AP)	
Load	Persons	4.000	2.518	0.000	0.850	0.898	4.168
	Fuel FLD	0.400	0.239	0.000	0.414	0.000	0.478
	Fuel FLA	0.040	0.239	0.000	0.414	0.000	0.478
	Provisions FLD	0.205	2.518	0.000	0.400	0.898	4.168
	Provisions FLA	0.021	2.518	0.000	0.400	0.898	4.168

7.5.5 Loading Conditions Analysis

For the MEV-I stability for the following loading conditions were analysed:

- Lightship
  The structure of MEV-I without any persons on-board, fuels and provisions.
- Full Load Departure
  MEV-I fully loaded with maximum capacity of passengers on board fuels and provisions (100%).
- Full Load Arrival
  MEV-I with maximum capacity of passengers on board and 10% of fuels and provisions on-board.
- Half passengers at B/2 FLD (According to LSA CH.IV §4.4.5)
  MEV-I fully loaded with provisions and fuels. The capacity of persons on-board is assumed in half and the TCG on B/2 from the CL, according to LSA CH.IV §4.4.5.
- Half passengers at B/2 FLA (According to LSA CH.IV §4.4.5)
  MEV-I with 10% of fuels and provisions on-board. The capacity of of persons on-board is assumed in half and the TCG on B/2 from the CL, according to LSA CH.IV §4.4.5.

The summary table below (Table 6.1) presents all the hydrostatics particulars for each of the loading conditions without the inflatables deployed. Additionally, Table 6.2 presents the hydrostatics particulars for each of the loading conditions with the inflatables deployed.

The detailed analysis for the stability calculations is shown in the Appendix.

Table 6.1: Summary table of the loading conditions analysed for the MEV-I demo (without the inflatables delpoyed).

Items	Units	LS	FLD	FLA	FLD_HPAX	FLA_HPAX
Deadweight	tn	0.00	4.60	4.10	2.60	2.10
Lightship	tn	5.80	5.80	5.80	5.80	5.80
Displacement	tn	5.80	10.50	9.90	8.50	7.90
LCG	m	2.272	2.293	2.363	2.155	2.233
TCG	m	0.000	0.000	0.000	0.237	0.253
VCG	m	1.458	1.306	1.366	1.320	1.395
FSM	tn·m	0.000	2.000	1.400	2.000	1.400
FSC	m	0.000	0.191	0.138	0.236	0.173
KG_{Corr}	m	1.458	1.497	1.504	1.556	1.568
LCB	m	2.252	2.247	2.351	2.062	2.177
TCB	m	0.000	0.000	0.000	0.418	0.433
VCB	m	0.180	0.305	0.288	0.290	0.268
Heel	deg.	0.000	0.000	0.000	8.140	7.900
Draft at LCF	m	0.343	0.572	0.545	0.470	0.440
Draft at AP	m	0.381	0.667	0.571	0.645	0.545
Draft at FP	m	0.301	0.475	0.518	0.277	0.326
Mean Draft at Midships	m	0.341	0.571	0.545	0.461	0.436
Trim by Stern	m	0.079	0.193	0.053	0.368	0.219
BM_T	m	4.136	2.577	2.726	2.781	2.930
Effective GM	m	2.858	1.386	1.511	1.474	1.598
BM_L	m	6.389	3.915	4.164	4.387	4.719
Waterplane Area	m^2	18.760	19.720	19.770	18.580	18.550
LCF	m	2.393	2.441	2.466	2.343	2.384
TCF	m	0.000	0.000	0.000	0.184	0.186
TPC	tn/cm	0.192	0.202	0.203	0.190	0.190
MTC	tn·m/cm	0.075	0.082	0.083	0.074	0.075
Area under GZ curve up to 30 deg. > 0.055	m·rads	0.247	0.151	0.161	0.068	0.074
Area under GZ curve from 30 to 40 deg. or downflood > 0.03	m·rads	0.092	0.074	0.076	0.038	0.037
Area under GZ curve up to 40 deg. or downflood > 0.09	m·rads	0.338	0.225	0.237	0.106	0.111
Maximum GZ to be at least 0.20 m at 30 deg. or above	m	0.627	0.44	0.46	0.245	0.256
Maximum GZ to be at an angle > 25 deg.	deg.	21.362	28.139	27.105	26.3	25.392
GM to be at least 0.15 m	m	2.858	1.386	1.511	1.474	1.598

Table 6.2: Summary table of the loading conditions analysed for the MEV-I demo (with the inflatables delpoyed).

Items	Units	LS	FLD	FLA	FLD_HPAX	FLA_HPAX
Deadweight	tn	0.00	4.60	4.10	2.60	2.10
Lightship	tn	5.90	5.90	5.90	5.90	5.90
Displacement	tn	5.90	10.50	9.90	8.50	7.90
LCG	m	2.279	2.297	2.368	2.245	2.330
TCG	m	0.000	0.000	0.000	0.236	0.253
VCG	m	1.845	1.692	1.758	1.701	1.785
FSM	tn·m	0.000	2.000	1.400	2.000	1.400
FSC	m	0.000	0.191	0.138	0.236	0.173
KG_{Corr}	m	1.845	1.882	1.896	1.937	1.958
LCB	m	2.248	2.226	2.330	2.174	2.290
TCB	m	0.000	0.000	0.000	0.332	0.345
VCB	m	0.317	0.443	0.427	0.405	0.386
Heel	deg.	0.000	0.000	0.000	3.550	3.320
Draft at LCF	m	0.499	0.688	0.666	0.611	0.587
Draft at AP	m	0.550	0.815	0.734	0.726	0.650
Draft at FP	m	0.446	0.568	0.602	0.493	0.522
Mean Draft at Midships	m	0.498	0.692	0.668	0.610	0.586
Trim by Stern	m	0.105	0.247	0.132	0.233	0.128
BM_T	m	8.448	4.053	4.245	5.185	5.464
Effective GM	m	6.921	2.605	2.784	3.686	3.993
BM_L	m	9.260	5.103	5.194	6.137	6.568
Waterplane Area	m^2	23.340	22.460	22.310	22.520	22.390
LCF	m	2.442	2.543	2.554	2.443	2.468
TCF	m	0.000	0.000	0.000	-0.043	-0.065
TPC	tn/cm	0.239	0.230	0.229	0.231	0.229
MTC	tn·m/cm	0.108	0.107	0.103	0.104	0.104
Area under GZ curve up to 30 deg. > 0.055	m·rads	0.439	0.257	0.281	0.198	0.222
Area under GZ curve from 30 to 40 deg. or downflood > 0.03	m·rads	0.115	0.091	0.096	0.059	0.06
Area under GZ curve up to 40 deg. or downflood > 0.09	m·rads	0.554	0.348	0.378	0.257	0.282
Maximum GZ to be at least 0.20 m at 30 deg. or above	m	1.102	0.686	0.752	0.558	0.625
Maximum GZ to be at an angle > 25 deg.	deg.	15.906	21.019	21.17	20.5	17.537
GM to be at least 0.15 m	m	6.921	2.605	2.784	3.686	3.993

7.6 Discussion

Regarding the structural analysis of MEVI demo, the analysis for the selected loading cases, shows the following:

a) The MEV-I on sagging condition (is supported by the crest of waves, fore and aft).
b) The MEV-I supported on the inflatables (crest of waves in the inflatables).
c) Launching condition; the MEV-I supported by the two attachment points, for launching at the top of the structure.
d) The stability of the MEV-I demo is sufficient for all loading conditions of both scenarios that were studied, i.e. with and without the inflatables deployed.

For the MEV demo, it is manufactured using bio-composite materials, same as the MEV-I.

Analysis shows that the proposed design is structurally sound with SF is more than 1.87 for all loading cases. Low SF or high Equivalent stresses appear in stress concentration areas (corners) and in places where the model is fixed, i.e. zero translation or rotation. These are not meaningful since in stress concentration areas (singularities), stresses reach high values and are also mesh dependent.

Stability of the MEV-I demo shows it has sufficient stability for all the loading conditions. It presents high values of GMs (metacentric heights), as well as the righting arms (GZs).

8 Regulatory framework

8.1 General requirements for lifeboats.

- General stability rule.
  All lifeboats shall have rigid hulls and shall be capable of maintaining positive stability when in an upright position in calm water and loaded with their full complement of persons and equipment and ***holed in any one location below the waterline, assuming no loss of buoyancy material and no other damage.***
- 4.4.1.3/6/7 Strength
- 4.4.4 Buoyancy → This will be superseded **by 5.1.1.2.**
- 4.4.5 General stability rules
- 4.4.6 Propulsion

8.2 Rescue boats

From here we will need all the sections for inflated parts

- 5.1.1.2: *required buoyant material for rescue boats may be installed external to the hull, provided it is adequately protected against damage and is capable of withstanding exposure as specified in paragraph 5.1.3.3*.
- 5.1.1.3: *Rescue boats may be either of rigid or inflated construction or a combination of both and shall…*
- 5.1.1.4: *Rescue boats which are a combination of rigid and inflated construction shall comply with the appropriate requirements of this section to the satisfaction of the Administration.*
- 5.1.3:
  - **Important!** 5.1.3.5 up to 10.

DNV suggests a hybrid approach for the MEV as it is a combination of a rigid boat equipped with inflatable parts attached at the bottom participating in the buoyancy of the MEV. To this end, all the four above sections of LSA code are applicable and should be satisfied by the proposed design.

9 Conclusions

The demand for high capacity Cruise and Passenger Ships, in the coming years will lead to Life boats with higher passenger capacity and smart systems integrated on board. The MEV-I which was designed and presented in this deliverable offers 50% more capacity compared to current Lifeboats, occupying the same space on deck and offering ease of embarkation.

The current design also offers quicker, easier launching system. The MEV-Is swinged into place, just in contact and on the same level with the deck. The people embark and then it's lowered to the sea, where the inflatables inflate. The proposed mechanism takes up much less space than current launching system existing on the test case ship (Hellenic Spirit).

Lastly MEV-I is manufactured using bio-composites and in that sense the PALAEMON's MEV-Is fully in line with current policies of the EC. The EC, as part of the European Green deal, has adopted a new circular action plan (CEAP). PALAEMON is fully in line with the proposed practices and policies of the EC as dictated in the CEAP, with the manufacturing of the MEV-I.

Appendix I Stability Calculations

In the appendix the stability calculations for MEV-I both the real scale and the demo are presented for all the loading conditions:

- Lightship
  The structure of MEV-I without any persons on-board, fuels and provisions.
- Full Load Departure
  MEV-I fully loaded with maximum capacity of passengers on board fuels and provisions (100%).
- Full Load Arrival
  MEV-I with maximum capacity of passengers on board and 10% of fuels and provisions on-board.
- Half passengers at B/2 FLD (According to LSA CH.IV §4.4.5)
  MEV-I fully loaded with provisions and fuels. The capacity of persons on-board is assumed in half and the TCG on B/2 from the CL, according to LSA CH.IV §4.4.5.
- Half passengers at B/2 FLA (According to LSA CH.IV §4.4.5)
  MEV-I with 10% of fuels and provisions on-board. The capacity of of persons on-board is assumed in half and the TCG on B/2 from the CL, according to LSA CH.IV §4.4.5.

The summarized tables for all loading conditons are provided in the respective sections of the document (i.e Section 5.5.5 and Section 7.5.5).

MEV-I real scale

Loading Conditions without inflatables

Lightship

The weights for this loading condition are shown below:

Group	Weight	LCG	TCG	VCG
	(tn)	(m)	(m)	(m)
Lightship	**15.900**	**7.040**	**0.000**	**1.511**

Drafts		
at LCF	0.155	m
at AP	0.165	m
at FP	0.145	m
mean at amidships	0.155	m

Heel	No heel	
Trim (by the stern)	0.021	m
VCG	1.511	m
FSC	0.000	m
VCG_{Corr}	1.511	m
GM	26.547	m
BM_T	27.962	m
BM_L	116.217	m
WPA	103.06	m^2
LCG	7.040	m
LCB	7.038	m
TCB	0.000	m
LCF	7.240	m
TCF	0.000	m
TPC	1.056	tn/cm
MTC	1.267	tn·m/cm

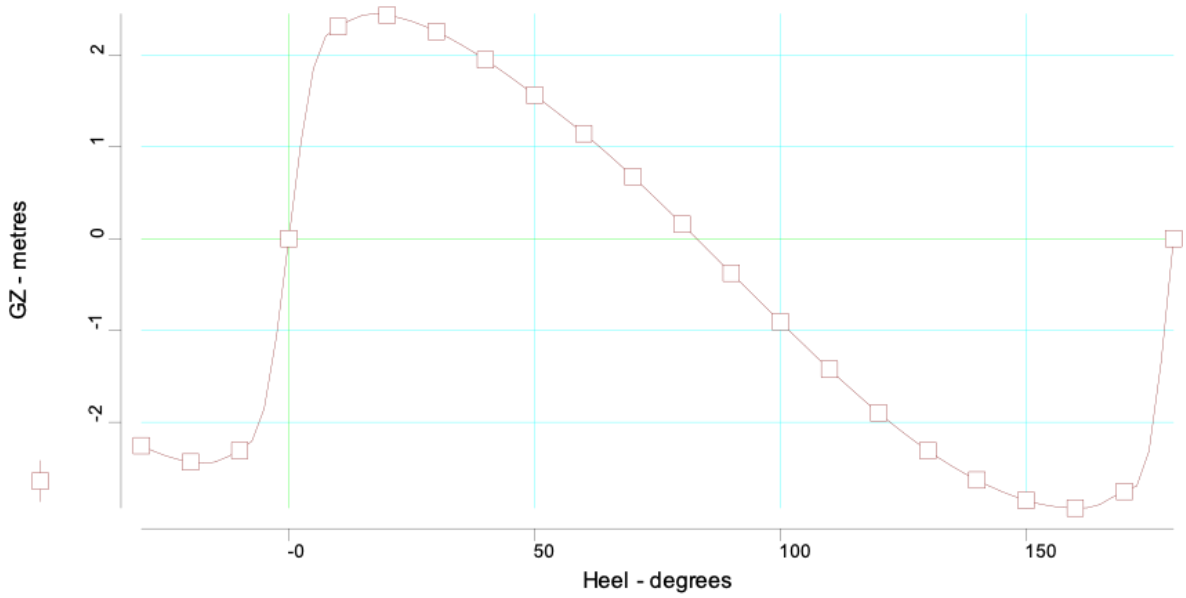

IMO A167 Intact Stability criteria			
#	Criterion	Actual Value	Required Value
1	Area under GZ curve up to 30º> 0.055	1.110	0.055
2	Area under GZ curve from 30º to 40º or downflood > 0.03	0.368	0.030
3	Area under GZ curve up to 40º or downflood > 0.09	1.479	0.090
4	Maximum GZ to be at least 0.20 m at 30º above	2.445	0.200
5	Maximum GZ to be at an angle > 25º	17.374	25.000
6	Initial GM to be at least 0.15 m	26.547	0.150

Full Load Departure

The weights for this loading condition are shown below:

Group	Weight	LCG	TCG	VCG
	(tn)	(m)	(m)	(m)
Persons	31.500	7.300	0.000	0.850
Fuel FLD	0.600	0.239	0.000	0.093
Provisions FLD	1.600	7.300	0.000	0.400
Deadweight	33.700	7.174	0.000	0.815
Lightship	15.900	7.040	0.000	1.511
Δ	**49.600**	**7.131**	**0.000**	**1.038**

Drafts		
at LCF	0.459	m
at AP	0.483	m
at FP	0.436	m
mean at amidships	0.459	m

Heel	No heel	
Trim (by the stern)	0.047	m
VCG	1.038	m
FSC	0.290	m
VCG_{Corr}	1.328	m
GM	10.465	m
BM_T	11.558	m
BM_L	41.352	m
WPA	112.69	m^2
LCG	7.131	m
LCB	7.128	m
TCB	0.000	m
LCF	7.284	m
TCF	0.000	m
TPC	1.155	tn/cm
MTC	1.405	tn·m/cm

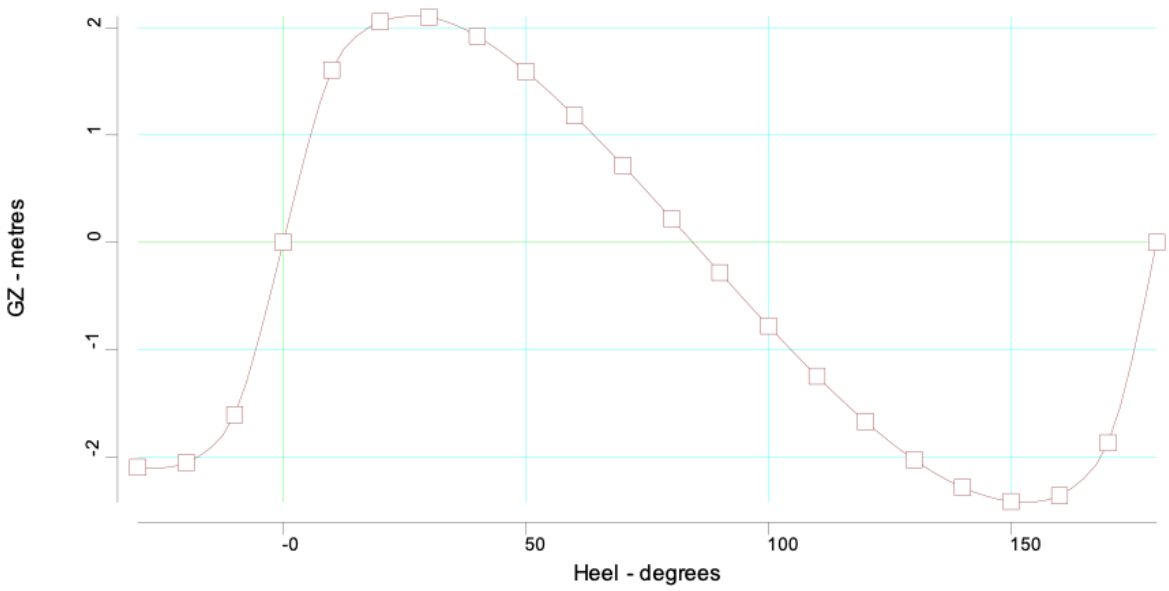

IMO A167 Intact Stability criteria			
#	Criterion	Actual Value	Required Value
1	Area under GZ curve up to 30º> 0.055	0.847	0.055
2	Area under GZ curve from 30º to 40º or downflood > 0.03	0.354	0.030
3	Area under GZ curve up to 40º or downflood > 0.09	1.201	0.090
4	Maximum GZ to be at least 0.20 m at 30º above	2.108	0.200
5	Maximum GZ to be at an angle > 25º	26.891	25.000
6	Initial GM to be at least 0.15 m	10.465	0.150

Full Load Arrival

The weights for this loading condition are shown below:

Group	Weight	LCG	TCG	VCG
	(tn)	(m)	(m)	(m)
Persons	31.500	7.300	0.000	0.850
Fuel FLA	0.060	0.239	0.000	0.093
Provisions FLA	0.200	7.300	0.000	0.400
Deadweight	31.760	7.287	0.000	0.846
Lightship	15.900	7.040	0.000	1.511
Δ	**47.600**	**7.204**	**0.000**	**1.068**

Drafts		
at LCF	0.442	m
at AP	0.451	m
at FP	0.433	m
mean at amidships	0.442	m

Heel	No heel	
Trim (by the stern)	0.019	m
VCG	1.068	m
FSC	0.262	m
VCG_{Corr}	1.330	m
GM	10.776	m
BM_T	11.880	m
BM_L	42.889	m
WPA	112.19	m^2
LCG	7.204	m
LCB	7.203	m
TCB	0.000	m
LCF	7.293	m
TCF	0.000	m
TPC	1.150	tn/cm
MTC	1.399	tn·m/cm

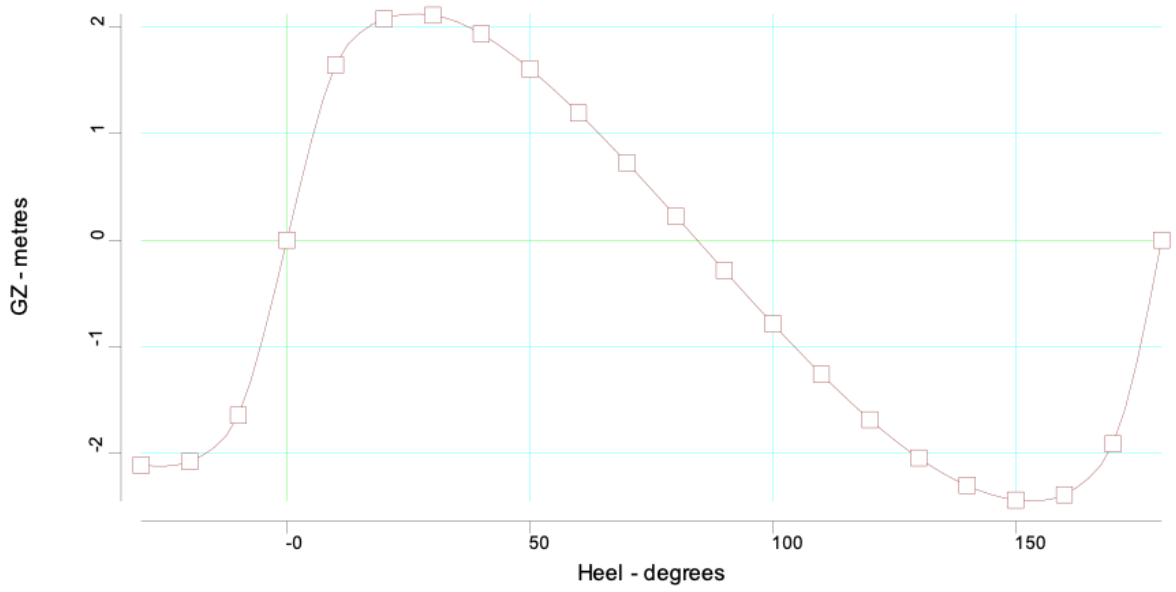

IMO A167 Intact Stability criteria			
#	Criterion	Actual Value	Required Value
1	Area under GZ curve up to 30º> 0.055	0.860	0.055
2	Area under GZ curve from 30º to 40º or downflood > 0.03	0.356	0.030
3	Area under GZ curve up to 40º or downflood > 0.09	1.216	0.090
4	Maximum GZ to be at least 0.20 m at 30º above	2.123	0.200
5	Maximum GZ to be at an angle > 25º	26.365	25.000
6	Initial GM to be at least 0.15 m	10.776	0.150

FLD Half Passengers (According to LSA CH.IV §4.4.5)

The weights for this loading condition are shown below:

Group	Weight	LCG	TCG	VCG
	(tn)	(m)	(m)	(m)
Persons (half capacity)	15.800	7.300	2.000	0.850
Fuel FLD	0.600	0.239	0.000	0.093
Provisions FLD	1.600	7.300	0.000	0.400
Deadweight	18.000	7.064	1.754	0.784
Lightship	15.900	7.040	0.000	1.511
Δ	**33.900**	**7.053**	**0.930**	**1.126**

Drafts		
at LCF	0.312	m
at AP	0.337	m
at FP	0.287	m
mean at amidships	0.312	m

Heel (to starboard)	3.85	deg.
Trim (by the stern)	0.050	m
VCG	1.126	m
FSC	0.424	m
VCG_{Corr}	1.550	m
GM	13.779	m
BM_T	15.300	m
BM_L	58.103	m
WPA	108.77	m^2
LCG	7.053	m
LCB	7.048	m
TCB	1.021	m
LCF	7.260	m
TCF	0.280	m
TPC	1.115	tn/cm
MTC	1.348	tn·m/cm

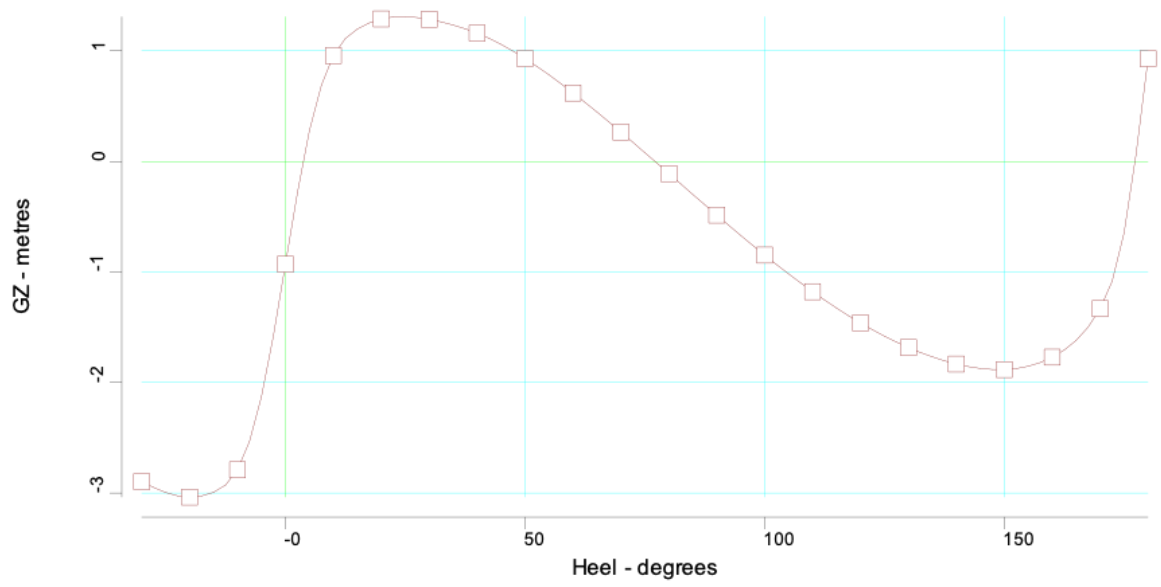

IMO A167 Intact Stability criteria			
#	Criterion	Actual Value	Required Value
1	Area under GZ curve up to 30º> 0.055	0.495	0.055
2	Area under GZ curve from 30º to 40º or downflood > 0.03	0.215	0.030
3	Area under GZ curve up to 40º or downflood > 0.09	0.709	0.090
4	Maximum GZ to be at least 0.20 m at 30º above	1.309	0.200
5	Maximum GZ to be at an angle > 25º	24.426	25.000
6	Initial GM to be at least 0.15 m	13.779	0.150

FLA Half Passengers (According to LSA CH.IV §4.4.5)

The weights for this loading condition are shown below:

Group	Weight	LCG	TCG	VCG
	(tn)	(m)	(m)	(m)
Persons (half capacity)	15.800	7.300	2.000	0.850
Fuel FLA	0.060	0.239	0.000	0.093
Provisions FLA	0.200	7.300	0.000	0.400
Deadweight	16.060	7.273	1.972	0.842
Lightship	15.900	7.040	0.000	1.511
Δ	**31.960**	**7.157**	**0.988**	**1.176**

Drafts		
at LCF	0.294	m
at AP	0.304	m
at FP	0.283	m
mean at amidships	0.294	m

Heel (to starboard)	3.90	deg.
Trim (by the stern)	0.021	m
VCG	1.176	m
FSC	0.392	m
VCG_{Corr}	1.568	m
GM	14.389	m
BM_T	16.024	m
BM_L	61.423	m
WPA	108.24	m^2
LCG	7.157	m
LCB	7.155	m
TCB	1.081	m
LCF	7.268	m
TCF	0.281	m
TPC	1.110	tn/cm
MTC	1.341	tn·m/cm

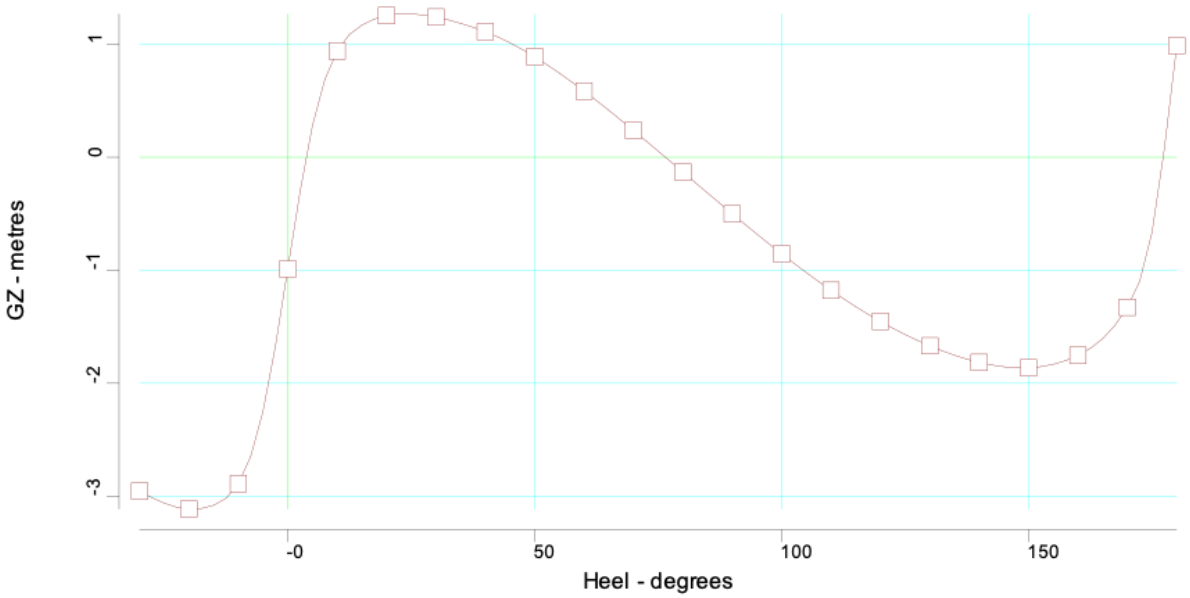

IMO A167 Intact Stability criteria			
#	Criterion	Actual Value	Required Value
1	Area under GZ curve up to 30º> 0.055	0.483	0.055
2	Area under GZ curve from 30º to 40º or downflood > 0.03	0.206	0.030
3	Area under GZ curve up to 40º or downflood > 0.09	0.689	0.090
4	Maximum GZ to be at least 0.20 m at 30º above	1.271	0.200
5	Maximum GZ to be at an angle > 25º	23.849	25.000
6	Initial GM to be at least 0.15 m	14.389	0.150

Loading Conditions with inflatables

Lightship

The weights for this loading condition are shown below:

Group	Weight	LCG	TCG	VCG
	(tn)	(m)	(m)	(m)
Lightship	**15.900**	**7.034**	**0.000**	**1.896**

Drafts		
at LCF	0.133	m
at AP	0.140	m
at FP	0.124	m
mean at amidships	0.132	m

Heel	No heel	
Trim (by the stern)	0.016	m
VCG	1.896	m
FSC	0.000	m
VCG_{Corr}	1.896	m
GM	41.600	m
BM_T	43.428	m
BM_L	138.156	m
WPA	120.38	m^2
LCG	7.034	m
LCB	7.032	m
TCB	0.000	m
LCF	7.226	m
TCF	0.000	m
TPC	1.234	tn/cm
MTC	1.505	tn·m/cm

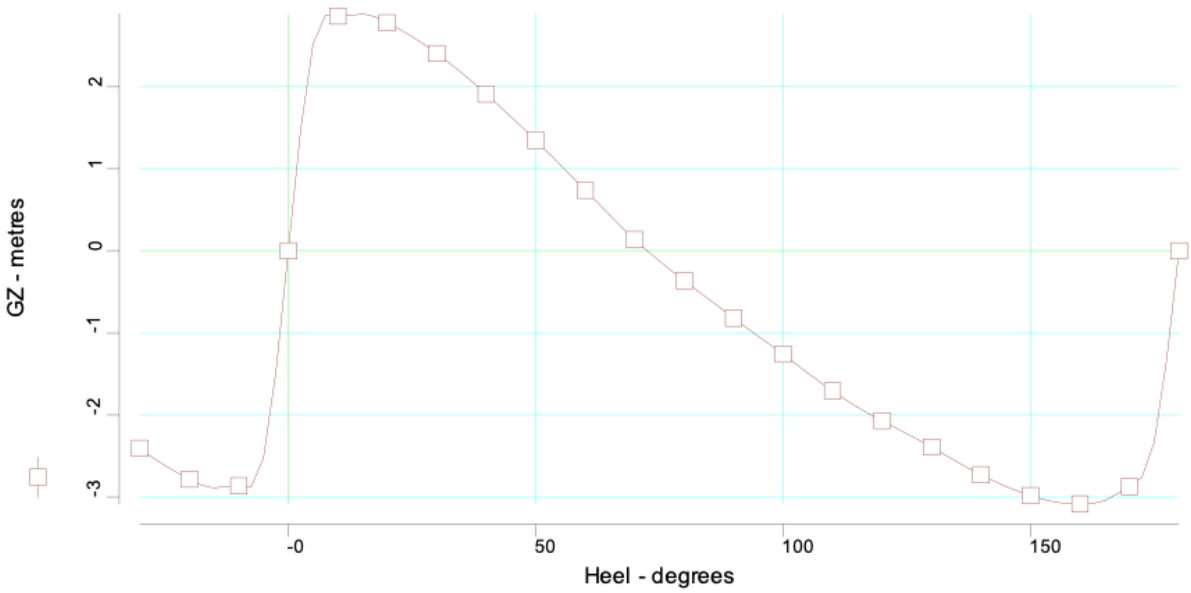

IMO A167 Intact Stability criteria			
#	Criterion	Actual Value	Required Value
1	Area under GZ curve up to 30º> 0.055	1.326	0.055
2	Area under GZ curve from 30º to 40º or downflood > 0.03	0.379	0.030
3	Area under GZ curve up to 40º or downflood > 0.09	1.704	0.090
4	Maximum GZ to be at least 0.20 m at 30º above	2.902	0.200
5	Maximum GZ to be at an angle > 25º	13.107	25.000
6	Initial GM to be at least 0.15 m	41.600	0.150

Full Load Departure

The weights for this loading condition are shown below:

Group	Weight	LCG	TCG	VCG
	(tn)	(m)	(m)	(m)
Persons	31.500	7.300	0.000	1.250
Fuel FLD	0.600	0.239	0.000	0.493
Provisions FLD	1.600	7.300	0.000	0.800
Deadweight	33.700	7.174	0.000	1.215
Lightship	15.900	7.034	0.000	1.896
Δ	**49.600**	**7.129**	**0.000**	**1.433**

Drafts		
at LCF	0.382	m
at AP	0.397	m
at FP	0.367	m
mean at amidships	0.382	m

Heel	No heel	
Trim (by the stern)	0.03	m
VCG	1.433	m
FSC	0.363	m
VCG_{Corr}	1.796	m
GM	18.421	m
BM_T	20.018	m
BM_L	52.746	m
WPA	139.1	m^2
LCG	7.129	m
LCB	7.126	m
TCB	0	m
LCF	7.31	m
TCF	0	m
TPC	1.426	tn/cm
MTC	1.792	tn·m/cm

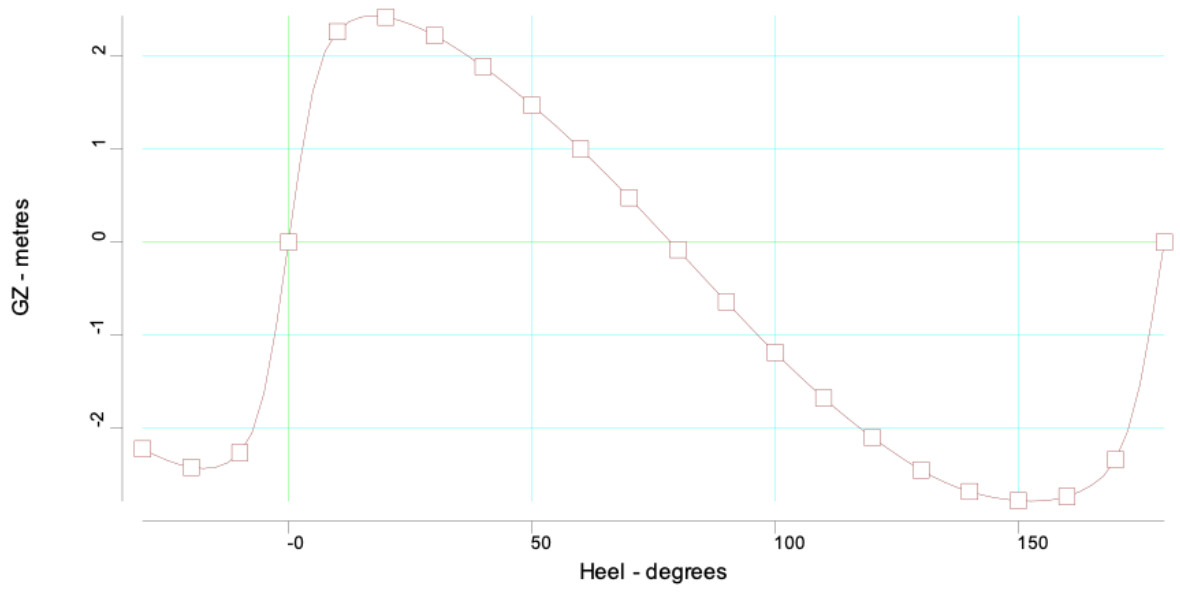

IMO A167 Intact Stability criteria			
#	Criterion	Actual Value	Required Value
1	Area under GZ curve up to 30º> 0.055	1.076	0.055
2	Area under GZ curve from 30º to 40º or downflood > 0.03	0.360	0.030
3	Area under GZ curve up to 40º or downflood > 0.09	1.436	0.090
4	Maximum GZ to be at least 0.20 m at 30º above	2.434	0.200
5	Maximum GZ to be at an angle > 25º	17.304	25.000
6	Initial GM to be at least 0.15 m	18.421	0.150

Full Load Arrival

The weights for this loading condition are shown below:

Group	Weight	LCG	TCG	VCG
	(tn)	(m)	(m)	(m)
Persons	31.500	7.300	0.000	1.250
Fuel FLA	0.060	0.239	0.000	0.493
Provisions FLA	0.160	7.300	0.000	0.800
Deadweight	31.700	7.287	0.000	1.246
Lightship	15.900	7.034	0.000	1.896
Δ	**47.600**	**7.202**	**0.000**	**1.463**

Drafts		
at LCF	0.368	m
at AP	0.372	m
at FP	0.363	m
mean at amidships	0.368	m

Heel	No heel	
Trim (by the stern)	0.008	m
VCG	1.463	m
FSC	0.304	m
VCG_{Corr}	1.767	m
GM	19.524	m
BM_T	21.108	m
BM_L	55.515	m
WPA	139.93	m^2
LCG	7.202	m
LCB	7.201	m
TCB	0	m
LCF	7.285	m
TCF	0	m
TPC	1.434	tn/cm
MTC	1.81	tn·m/cm

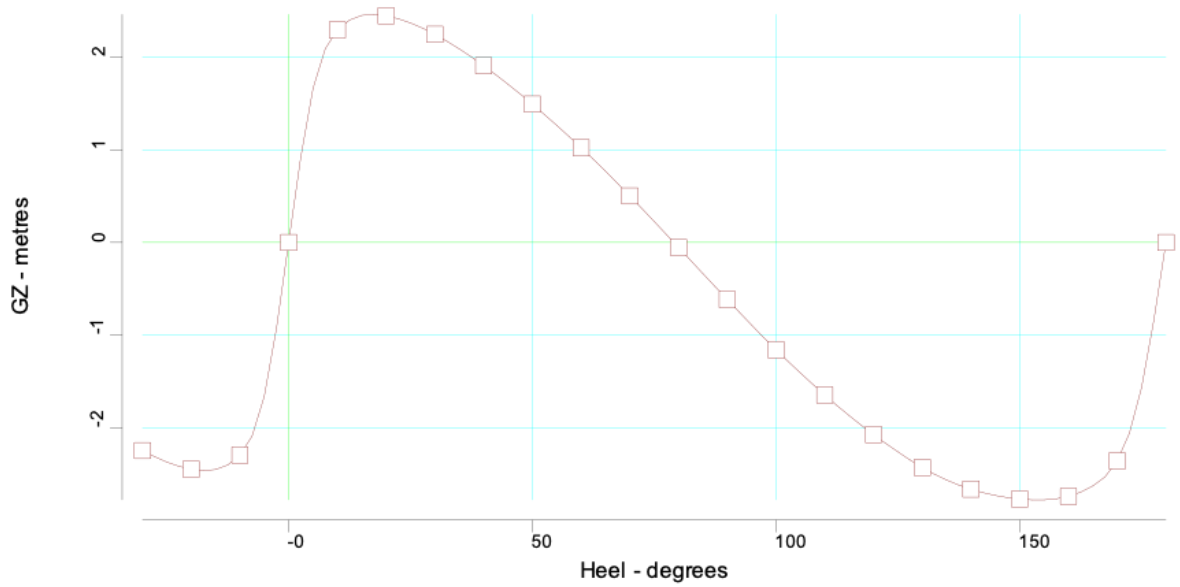

IMO A167 Intact Stability criteria			
#	Criterion	Actual Value	Required Value
1	Area under GZ curve up to 30º> 0.055	1.092	0.055
2	Area under GZ curve from 30º to 40º or downflood > 0.03	0.364	0.030
3	Area under GZ curve up to 40º or downflood > 0.09	1.456	0.090
4	Maximum GZ to be at least 0.20 m at 30º above	2.463	0.200
5	Maximum GZ to be at an angle > 25º	17.188	25.000
6	Initial GM to be at least 0.15 m	19.524	0.150

FLD Half Passengers (According to LSA CH.IV §4.4.5)

The weights for this loading condition are shown below:

Group	Weight	LCG	TCG	VCG
	(tn)	(m)	(m)	(m)
Persons (half capacity)	15.750	7.300	2.000	1.250
Fuel FLD	0.600	0.239	0.000	0.493
Provisions FLD	1.600	7.300	0.000	0.800
Deadweight	18.000	7.064	1.754	1.184
Lightship	15.900	7.034	0.000	1.896
Δ	**33.900**	**7.050**	**0.930**	**1.519**

Drafts		
at LCF	0.263	m
at AP	0.282	m
at FP	0.245	m
mean at amidships	0.263	m

Heel (to starboard)	2.23	deg.
Trim (by the stern)	0.037	m
VCG	1.519	m
FSC	0.531	m
VCG_{Corr}	2.05	m
GM	24.051	m
BM_T	23.603	m
BM_L	70.38	m
WPA	127.23	m^2
LCG	7.050	m
LCB	7.045	m
TCB	1.003	m
LCF	7.285	m
TCF	0.220	m
TPC	1.304	tn/cm
MTC	1.631	tn·m/cm

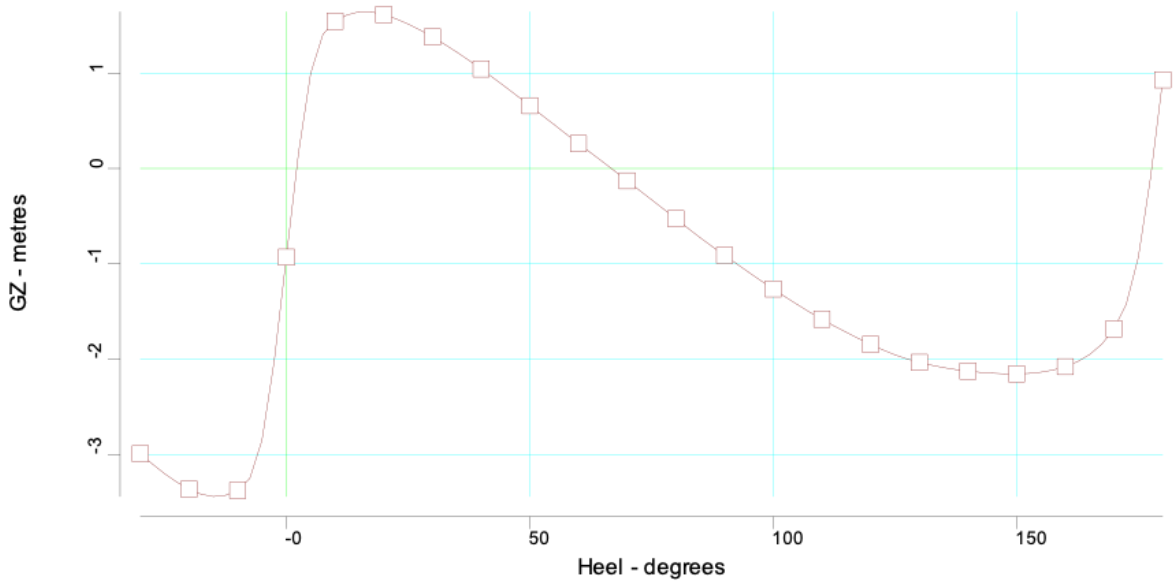

IMO A167 Intact Stability criteria			
#	Criterion	Actual Value	Required Value
1	Area under GZ curve up to 30º> 0.055	0.693	0.055
2	Area under GZ curve from 30º to 40º or downflood > 0.03	0.213	0.030
3	Area under GZ curve up to 40º or downflood > 0.09	0.905	0.090
4	Maximum GZ to be at least 0.20 m at 30º above	1.646	0.200
5	Maximum GZ to be at an angle > 25º	15.930	25.000
6	Initial GM to be at least 0.15 m	24.051	0.150

FLA Half Passengers (According to LSA CH.IV §4.4.5)

The weights for this loading condition are shown below:

Group	Weight	LCG	TCG	VCG
	(tn)	(m)	(m)	(m)
Persons (half capacity)	15.75	7.300	2.000	1.250
Fuel FLA	0.060	0.239	0.000	0.493
Provisions FLA	0.160	7.300	0.000	0.800
Deadweight	16.000	7.273	1.972	1.242
Lightship	15.900	7.034	0.000	1.896
Δ	**31.900**	**7.154**	**0.988**	**1.569**

Drafts		
at LCF	0.248	m
at AP	0.255	m
at FP	0.241	m
mean at amidships	0.248	m

Heel (to starboard)	2.25	deg.
Trim (by the stern)	0.013	m
VCG	1.569	m
FSC	0.454	m
VCG_{Corr}	2.022	m
GM	24.743	m
BM_T	25.618	m
BM_L	74.818	m
WPA	128.65	m^2
LCG	7.154	m
LCB	7.153	m
TCB	1.062	m
LCF	7.295	m
TCF	0.268	m
TPC	1.319	tn/cm
MTC	1.632	tn·m/cm

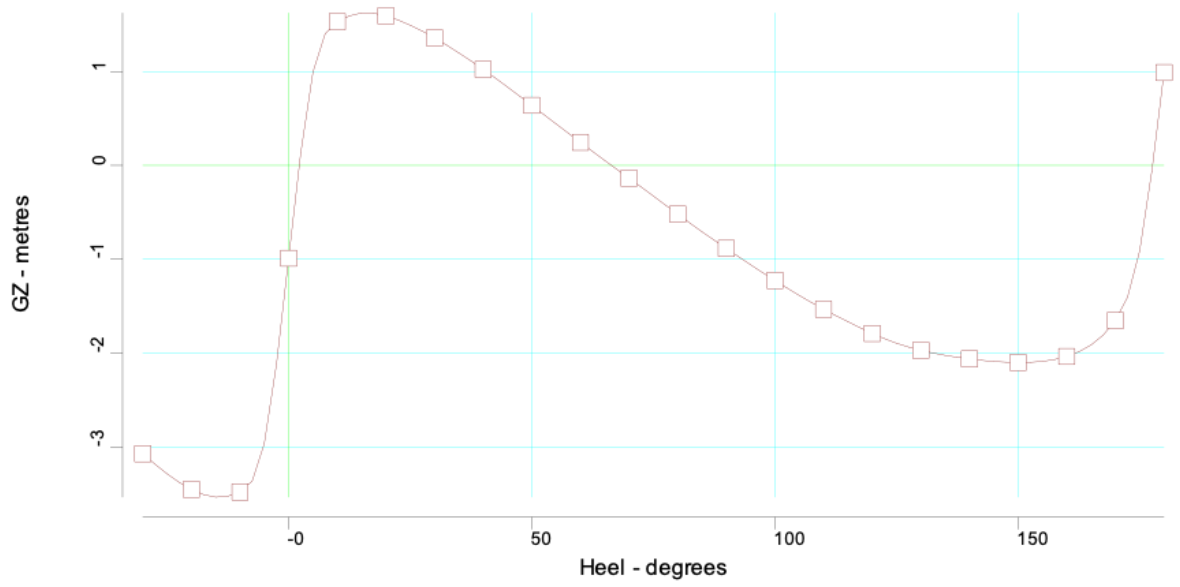

IMO A167 Intact Stability criteria			
#	Criterion	Actual Value	Required Value
1	Area under GZ curve up to 30º> 0.055	0.684	0.055
2	Area under GZ curve from 30º to 40º or downflood > 0.03	0.209	0.030
3	Area under GZ curve up to 40º or downflood > 0.09	0.892	0.090
4	Maximum GZ to be at least 0.20 m at 30º above	1.624	0.200
5	Maximum GZ to be at an angle > 25º	15.817	25.000
6	Initial GM to be at least 0.15 m	24.743	0.150

MEV-I demo

Loading Conditions without inflatables

Lightship

The weights for this loading condition are shown below:

Group	Weight	LCG	TCG	VCG
	(tn)	(m)	(m)	(m)
Structure	3.800	2.500	0.000	2.200
Inflatables	0.352	2.500	0.000	0.250
Outfitting	1.000	2.300	0.000	1.300
Engine	0.600	0.239	0.000	0.414
Equipment	0.100	4.717	0.000	0.905
Lightship	**5.852**	**2.272**	**0.000**	**1.458**

Drafts		
at LCF	0.343	m
at AP	0.381	m
at FP	0.301	m
mean at amidships	0.341	m

Heel	No heel	
Trim by the stern	0.079	m
VCG	1.458	m
FSC	0.000	m
VCG_{Corr}	1.458	m
GM	2.858	m
BM_T	4.136	m
BM_L	6.389	m
WPA	18.76	m^2
LCG	2.272	m
LCB	2.252	m
TCB	0.000	m
LCF	2.393	m
TCF	0.000	m
TPC	0.192	tn/cm
MTC	0.075	tn·m/cm

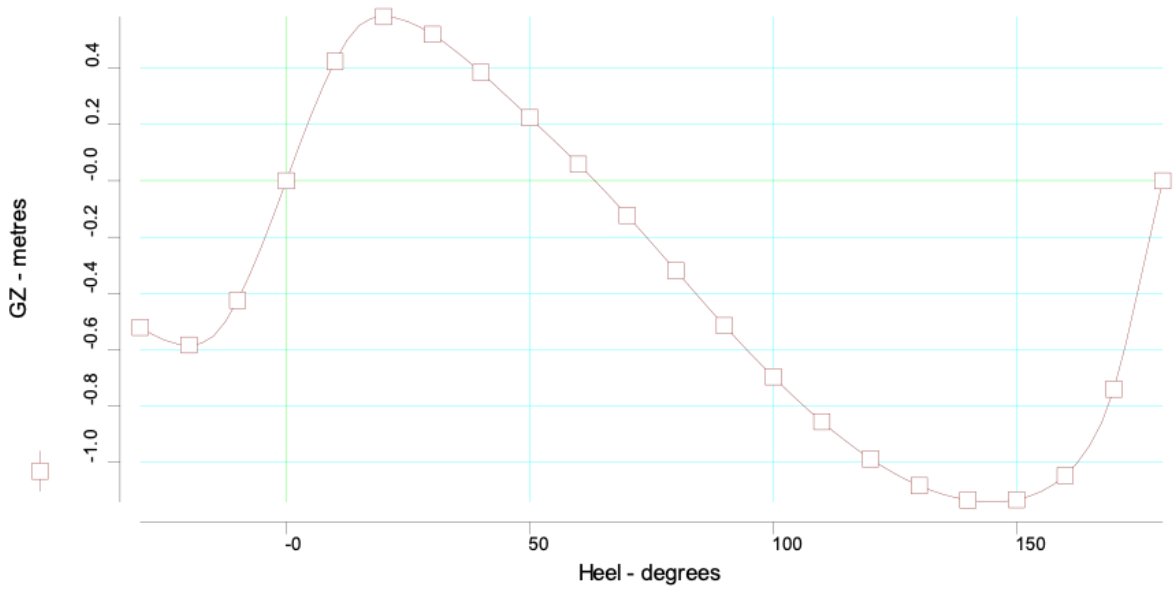

IMO A167 Intact Stability criteria			
#	Criterion	Actual Value	Required Value
1	Area under GZ curve up to 30º> 0.055	0.247	0.055
2	Area under GZ curve from 30º to 40º or downflood > 0.03	0.092	0.030
3	Area under GZ curve up to 40º or downflood > 0.09	0.338	0.090
4	Maximum GZ to be at least 0.20 m at 30º above	0.627	0.200
5	Maximum GZ to be at an angle > 25º	21.362	25.000
6	Initial GM to be at least 0.15 m	2.858	0.150

Full Load Departure

Group	Weight	LCG	TCG	VCG
	(tn)	(m)	(m)	(m)
Persons	4.000	2.518	0.000	0.850
Fuel FLD	0.400	0.239	0.000	0.124
Provisions FLD	0.205	2.518	0.000	0.800
Deadweight	4.605	2.320	0.000	1.114
Lightship	5.852	2.272	0.000	1.458
Δ	**10.457**	**2.293**	**0.000**	**1.306**

Drafts		
at LCF	0.572	m
at AP	0.667	m
at FP	0.475	m
mean at amidships	0.571	m

Heel	No heel	
Trim by the stern	0.193	m
VCG	1.306	m
FSC	0.191	m
VCG_{Corr}	1.497	m
GM	1.386	m
BM_T	2.577	m
BM_L	3.915	m
WPA	19.72	m^2
LCG	2.293	m
LCB	2.247	m
TCB	0.000	m
LCF	2.441	m
TCF	0.000	m
TPC	0.202	tn/cm
MTC	0.082	tn·m/cm

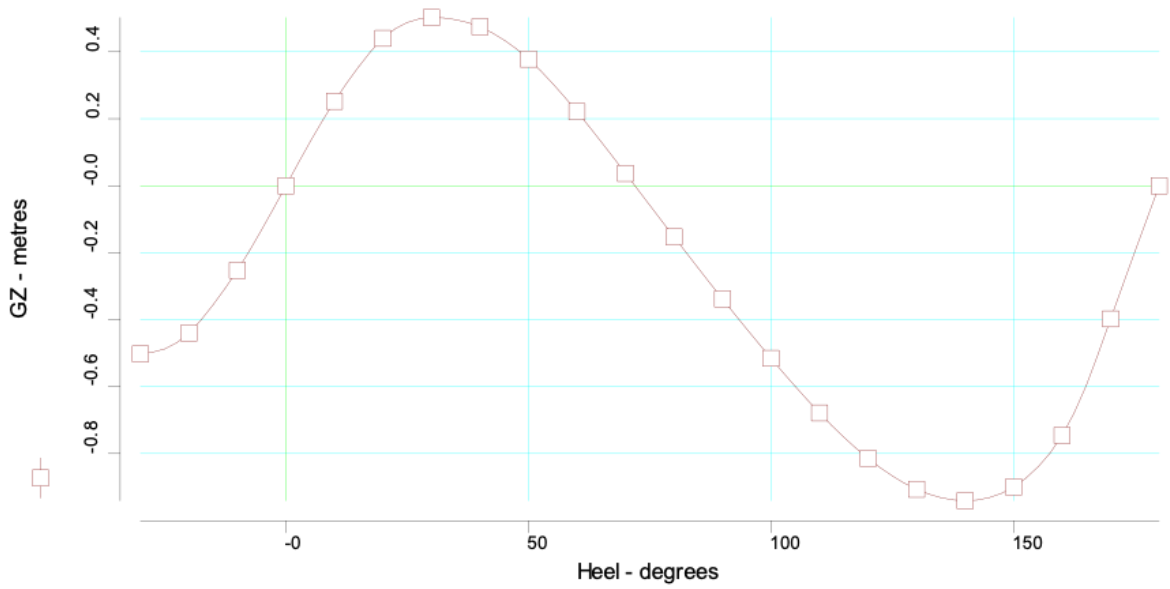

IMO A167 Intact Stability criteria			
#	Criterion	Actual Value	Required Value
1	Area under GZ curve up to 30º> 0.055	0.151	0.055
2	Area under GZ curve from 30º to 40º or downflood > 0.03	0.074	0.030
3	Area under GZ curve up to 40º or downflood > 0.09	0.225	0.090
4	Maximum GZ to be at least 0.20 m at 30º above	0.440	0.200
5	Maximum GZ to be at an angle > 25º	28.139	25.000
6	Initial GM to be at least 0.15 m	1.386	0.150

Full Load Arrival

Group	Weight	LCG	TCG	VCG
	(tn)	(m)	(m)	(m)
Persons	4.000	2.518	0.000	0.850
Fuel FLA	0.040	0.239	0.000	0.124
Provisions FLA	0.020	2.518	0.000	0.800
Load	4.060	2.496	0.000	1.234
Lightship	5.852	2.272	0.000	1.458
Δ	**9.912**	**2.363**	**0.000**	**1.366**

Drafts		
at LCF	0.545	m
at AP	0.570	m
at FP	0.520	m
mean at amidships	0.545	m

Heel	No heel	
Trim by the stern	0.050	m
VCG	1.366	m
FSC	0.138	m
VCG_{Corr}	1.504	m
GM	1.511	m
BM_T	2.726	m
BM_L	4.164	m
WPA	19.77	m^2
LCG	2.363	m
LCB	2.351	m
TCB	0.000	m
LCF	2.466	m
TCF	0.000	m
TPC	0.203	tn/cm
MTC	0.083	tn·m/cm

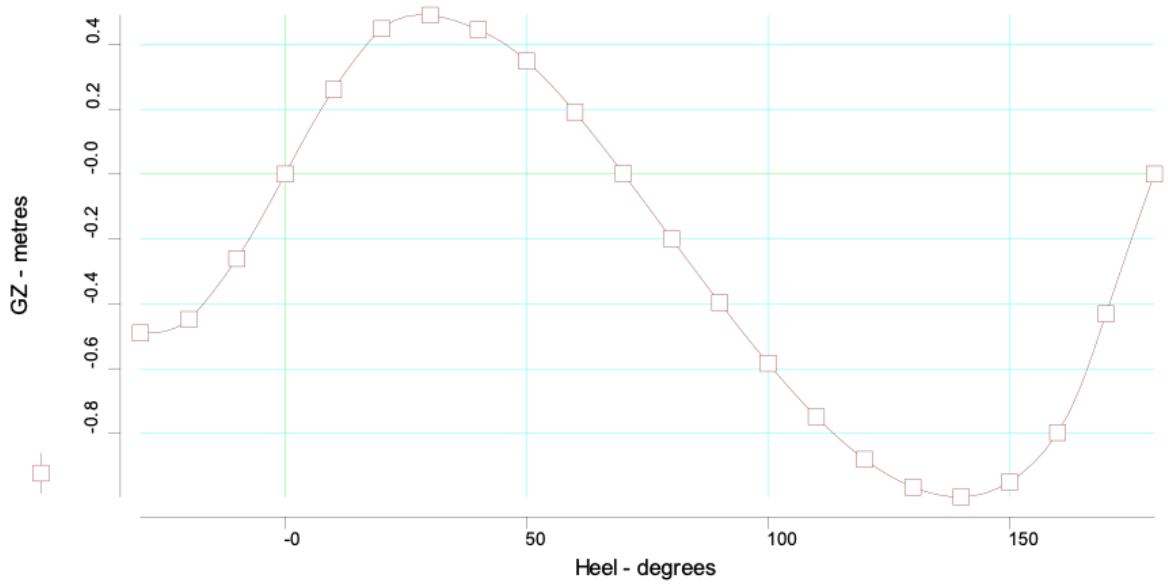

IMO A167 Intact Stability criteria			
#	Criterion	Actual Value	Required Value
1	Area under GZ curve up to 30º> 0.055	0.161	0.055
2	Area under GZ curve from 30º to 40º or downflood > 0.03	0.076	0.030
3	Area under GZ curve up to 40º or downflood > 0.09	0.237	0.090
4	Maximum GZ to be at least 0.20 m at 30º above	0.460	0.200
5	Maximum GZ to be at an angle > 25º	27.105	25.000
6	Initial GM to be at least 0.15 m	1.511	0.150

FLD Half Passengers (According to LSA CH.IV §4.4.5)

Group	Weight	LCG	TCG	VCG
	(tn)	(m)	(m)	(m)
Persons (half capacity)	2.000	2.518	1.000	0.850
Fuel FLD	0.400	0.239	0.000	0.124
Provisions FLD	0.205	2.518	0.000	0.800
Deadweight	2.605	1.892	0.768	1.010
Lightship	5.852	2.272	0.000	1.458
Δ	**8.457**	**2.155**	**0.237**	**1.320**

Drafts		
at LCF	0.470	m
at AP	0.645	m
at FP	0.277	m
mean at amidships	0.461	m

Heel to starboard	8.14	deg.
Trim by the stern	0.368	m
VCG	1.4320	m
FSC	0.236	m
VCG_{Corr}	1.556	m
GM	1.474	m
BM_T	2.781	m
BM_L	4.387	m
WPA	18.58	m^2
LCG	2.155	m
LCB	2.062	m
TCB	0.418	m
LCF	2.343	m
TCF	0.184	m
TPC	0.190	tn/cm
MTC	0.074	tn·m/cm

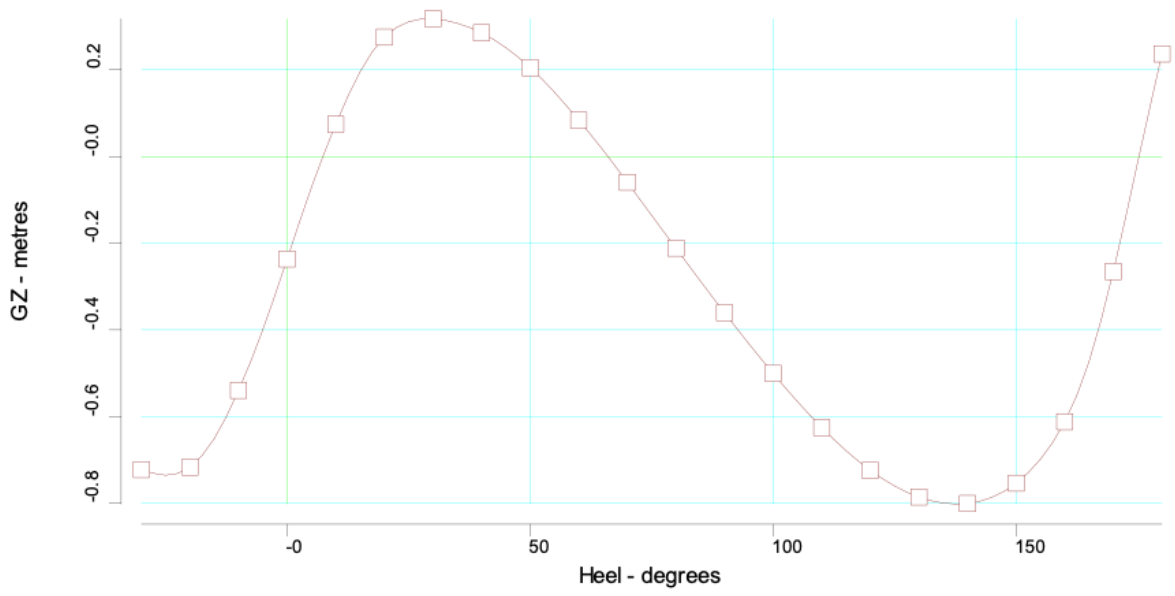

IMO A167 Intact Stability criteria			
#	Criterion	Actual Value	Required Value
1	Area under GZ curve up to 30º> 0.055	0.068	0.055
2	Area under GZ curve from 30º to 40º or downflood > 0.03	0.038	0.030
3	Area under GZ curve up to 40º or downflood > 0.09	0.106	0.090
4	Maximum GZ to be at least 0.20 m at 30º above	0.245	0.200
5	Maximum GZ to be at an angle > 25º	26.300	25.000
6	Initial GM to be at least 0.15 m	1.474	0.150

FLA Half Passengers (According to LSA CH.IV §4.4.5)

Group	Weight	LCG	TCG	VCG
	(tn)	(m)	(m)	(m)
Persons (half capacity)	2.000	2.518	1.000	0.850
Fuel FLA	0.040	0.239	0.000	0.124
Provisions FLA	0.020	2.518	0.000	0.800
Load	2.060	2.124	0.971	1.218
Lightship	5.852	2.272	0.000	1.458
Δ	**7.912**	**2.233**	**0.253**	**1.395**

Drafts		
at LCF	0.440	m
at AP	0.545	m
at FP	0.326	m
mean at amidships	0.436	m

Heel to starboard	7.900	deg.
Trim by the stern	0.219	m
VCG	1.395	m
FSC	0.173	m
VCG_{Corr}	1.568	m
GM	1.598	m
BM_T	2.930	m
BM_L	4.719	m
WPA	18.55	m^2
LCG	2.233	m
LCB	2.177	m
TCB	0.433	m
LCF	2.384	m
TCF	0.186	m
TPC	0.190	tn/cm
MTC	0.075	tn·m/cm

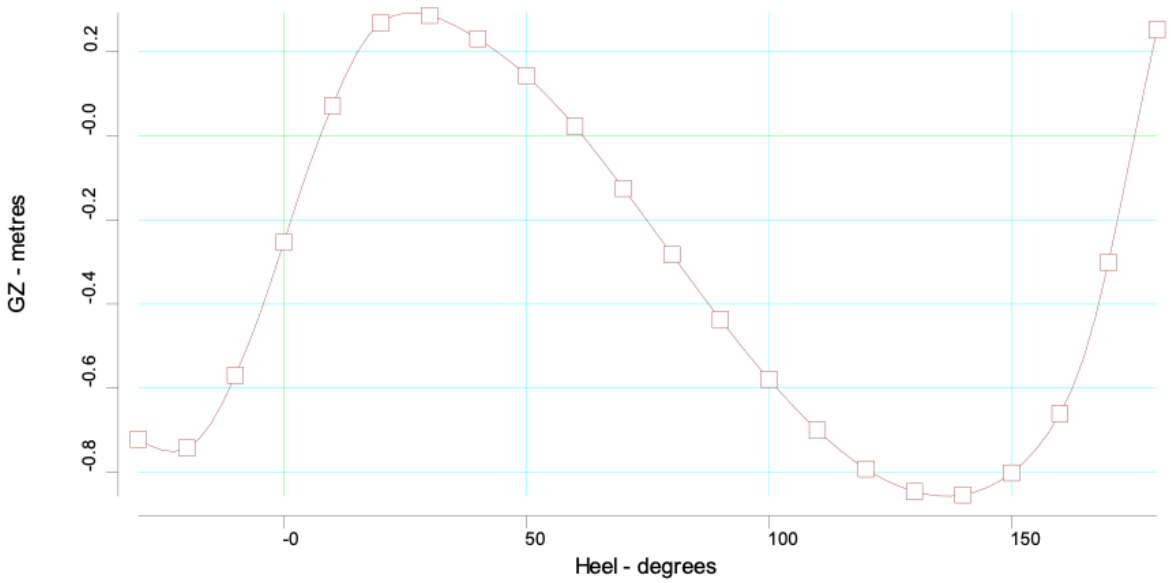

IMO A167 Intact Stability criteria			
#	Criterion	Actual Value	Required Value
1	Area under GZ curve up to 30º> 0.055	0.074	0.055
2	Area under GZ curve from 30º to 40º or downflood > 0.03	0.037	0.030
3	Area under GZ curve up to 40º or downflood > 0.09	0.111	0.090
4	Maximum GZ to be at least 0.20 m at 30º above	0.256	0.200
5	Maximum GZ to be at an angle > 25º	25.392	25.000
6	Initial GM to be at least 0.15 m	1.598	0.150

Loading Conditions with inflatables

Lightship

The weights for this loading condition are shown below:

Group	Weight	LCG	TCG	VCG
	(tn)	(m)	(m)	(m)
Structure	3.800	2.500	0.000	2.200
Inflatables	0.352	2.625	0.000	0.448
Outfitting	1.000	2.300	0.000	2.400
Engine	0.600	0.239	0.000	0.814
Equipment	0.100	4.717	0.000	0.905
Lightship	**5.852**	**2.279**	**0.000**	**1.845**

Drafts		
at LCF	0.499	m
at AP	0.551	m
at FP	0.445	m
mean at amidships	0.498	m

Heel	No heel	
Trim by the stern	0.106	m
VCG	1.845	m
FSC	0.000	m
VCG_{Corr}	1.845	m
GM	6.921	m
BM_T	8.448	m
BM_L	9.260	m
WPA	23.340	m^2
LCG	2.279	m
LCB	2.248	m
TCB	0.000	m
LCF	2.442	m
TCF	0.000	m
TPC	0.239	tn/cm
MTC	0.108	tn·m/cm

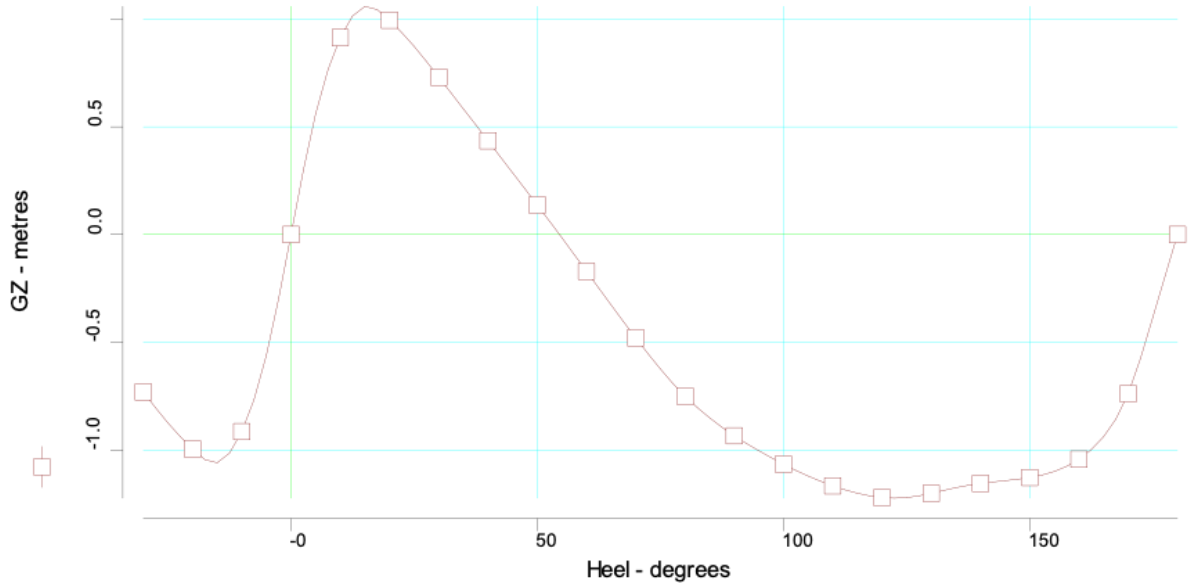

IMO A167 Intact Stability criteria			
#	Criterion	Actual Value	Required Value
1	Area under GZ curve up to 30º> 0.055	0.439	0.055
2	Area under GZ curve from 30º to 40º or downflood > 0.03	0.115	0.030
3	Area under GZ curve up to 40º or downflood > 0.09	0.554	0.090
4	Maximum GZ to be at least 0.20 m at 30º above	1.102	0.200
5	Maximum GZ to be at an angle > 25º	15.906	25.000
6	Initial GM to be at least 0.15 m	6.921	0.150

Full Load Departure

Group	Weight	LCG	TCG	VCG
	(tn)	(m)	(m)	(m)
Persons	4.000	2.518	0.000	1.650
Fuel FLD	0.400	0.239	0.000	0.524
Provisions FLD	0.205	2.518	0.000	0.800
Deaweight	4.605	2.320	0.000	1.497
Lightship	5.852	2.279	0.000	1.845
Δ	**10.457**	**2.297**	**0.000**	**1.692**

Drafts		
at LCF	0.688	m
at AP	0.815	m
at FP	0.568	m
mean at amidships	0.692	m

Heel	No heel	
Trim by the stern	0.247	m
VCG	1.692	m
FSC	0.191	m
VCG_{Corr}	1.882	m
GM	2.605	m
BM_T	4.053	m
BM_L	5.103	m
WPA	22.460	m^2
LCG	2.297	m
LCB	2.226	m
TCB	0.000	m
LCF	2.543	m
TCF	0.000	m
TPC	0.230	tn/cm
MTC	0.107	tn·m/cm

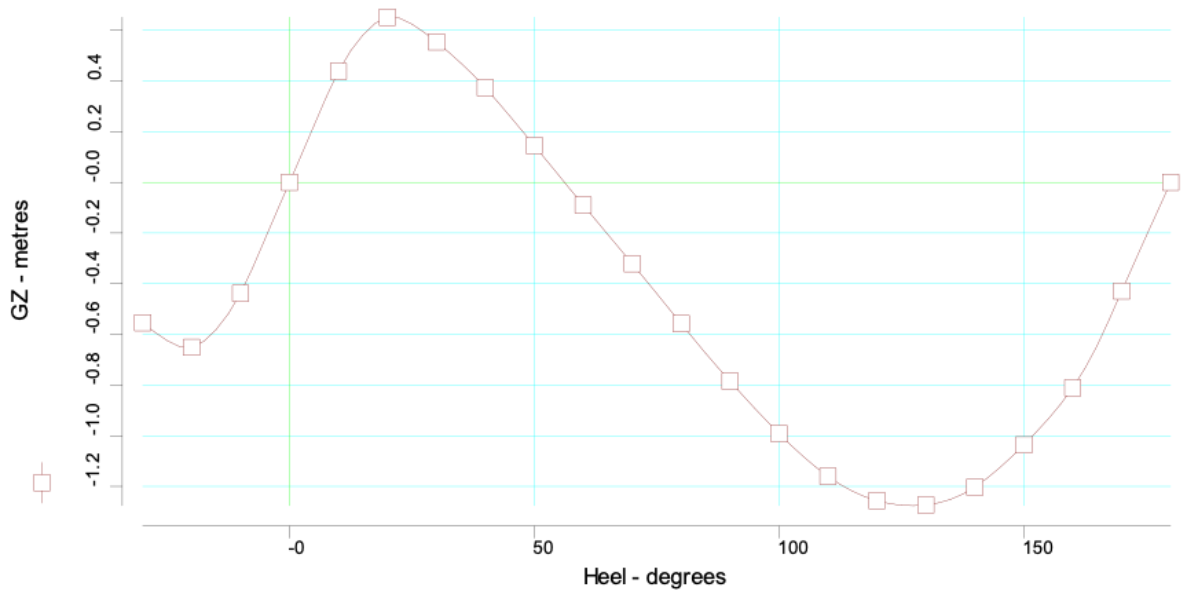

IMO A167 Intact Stability criteria			
#	Criterion	Actual Value	Required Value
1	Area under GZ curve up to 30º> 0.055	0.257	0.055
2	Area under GZ curve from 30º to 40º or downflood > 0.03	0.091	0.030
3	Area under GZ curve up to 40º or downflood > 0.09	0.348	0.090
4	Maximum GZ to be at least 0.20 m at 30º above	0.686	0.200
5	Maximum GZ to be at an angle > 25º	21.019	25.000
6	Initial GM to be at least 0.15 m	2.605	0.150

Full Load Arrival

Group	Weight	LCG	TCG	VCG
	(tn)	(m)	(m)	(m)
Persons	4.000	2.518	0.000	1.650
Fuel FLA	0.040	0.239	0.000	0.524
Provisions FLA	0.020	2.518	0.000	0.800
Deaweight	4.060	2.496	0.000	1.632
Lightship	5.852	2.279	0.000	1.845
Δ	**9.912**	**2.368**	**0.000**	**1.758**

Drafts		
at LCF	0.666	m
at AP	0.734	m
at FP	0.602	m
mean at amidships	0.668	m

Heel	No heel	
Trim by the stern	0.132	m
VCG	1.758	m
FSC	0.138	m
VCG_{Corr}	1.896	m
GM	2.784	m
BM_T	4.245	m
BM_L	5.194	m
WPA	22.31	m^2
LCG	2.368	m
LCB	2.330	m
TCB	0.000	m
LCF	2.554	m
TCF	0.000	m
TPC	0.229	tn/cm
MTC	0.103	tn·m/cm

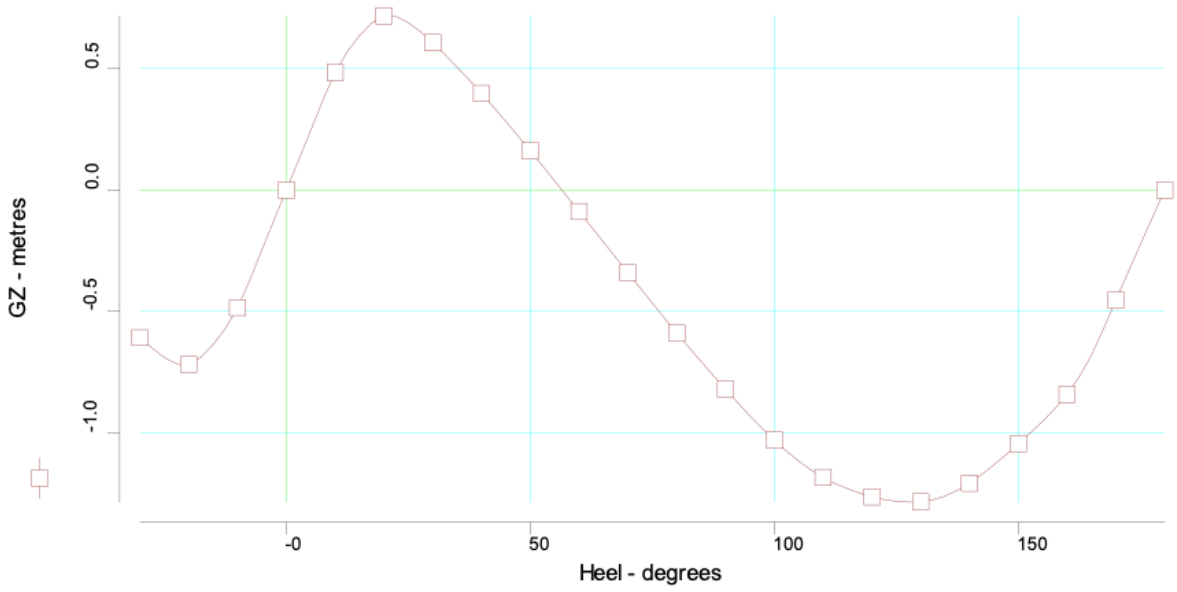

IMO A167 Intact Stability criteria			
#	Criterion	Actual Value	Required Value
1	Area under GZ curve up to 30º> 0.055	0.281	0.055
2	Area under GZ curve from 30º to 40º or downflood > 0.03	0.096	0.030
3	Area under GZ curve up to 40º or downflood > 0.09	0.378	0.090
4	Maximum GZ to be at least 0.20 m at 30º above	0.752	0.200
5	Maximum GZ to be at an angle > 25º	21.170	25.000
6	Initial GM to be at least 0.15 m	2.784	0.150

FLD Half Passengers (According to LSA CH.IV §4.4.5)

Group	Weight	LCG	TCG	VCG
	(tn)	(m)	(m)	(m)
Persons (half capacity)	2.000	2.518	1.000	1.650
Fuel FLD	0.400	0.239	0.000	0.524
Provisions FLD	0.205	2.518	0.000	0.800
Deaweight	2.605	2.168	0.768	1.379
Lightship	5.852	2.279	0.000	1.845
Δ	**8.457**	**2.245**	**0.237**	**1.701**

Drafts		
at LCF	0.611	m
at AP	0.726	m
at FP	0.493	m
mean at amidships	0.610	m

Heel to starboard	3.550	deg.
Trim by the stern	0.233	m
VCG	1.701	m
FSC	0.236	m
VCG_{Corr}	1.937	m
GM	3.686	m
BM_T	5.184	m
BM_L	6.137	m
WPA	22.52	m^2
LCG	2.245	m
LCB	2.174	m
TCB	0.332	m
LCF	2.443	m
TCF	-0.043	m
TPC	0.231	tn/cm
MTC	0.104	tn·m/cm

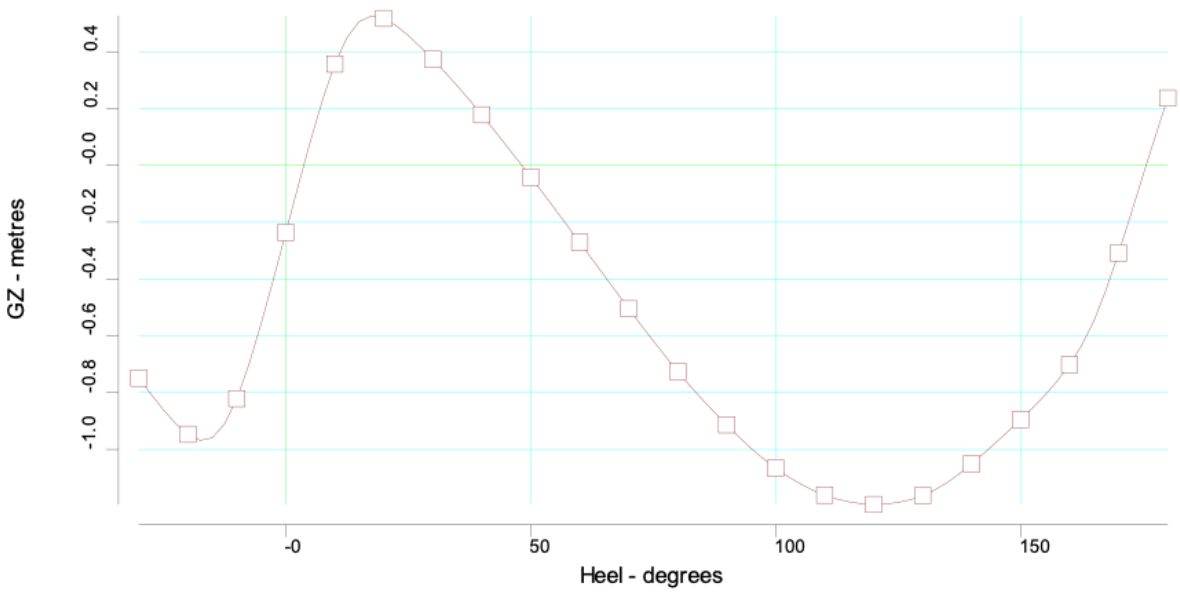

IMO A167 Intact Stability criteria			
#	Criterion	Actual Value	Required Value
1	Area under GZ curve up to 30º> 0.055	0.198	0.055
2	Area under GZ curve from 30º to 40º or downflood > 0.03	0.059	0.030
3	Area under GZ curve up to 40º or downflood > 0.09	0.257	0.090
4	Maximum GZ to be at least 0.20 m at 30º above	0.558	0.200
5	Maximum GZ to be at an angle > 25º	20.500	25.000
6	Initial GM to be at least 0.15 m	3.686	0.150

FLA Half Passengers (According to LSA CH.IV §4.4.5)

Group	Weight	LCG	TCG	VCG
	(tn)	(m)	(m)	(m)
Persons	2.000	2.518	1.000	1.650
Fuel FLA	0.040	0.239	0.000	0.524
Provisions FLA	0.020	2.518	0.000	0.800
Deadweight	2.060	2.496	0.971	1.614
Lightship	5.852	2.279	0.000	1.845
Δ	**7.912**	**2.330**	**0.253**	**1.785**

Drafts		
at LCF	0.587	m
at AP	0.650	m
at FP	0.522	m
mean at amidships	0.586	m

Heel to starboard	3.32	deg.
Trim by the stern	0.128	m
VCG	1.785	m
FSC	0.173	m
VCG_{Corr}	1.958	m
GM	3.993	m
BM_T	5.464	m
BM_L	6.568	m
WPA	22.39	m^2
LCG	2.330	m
LCB	2.290	m
TCB	0.345	m
LCF	2.468	m
TCF	-0.065	m
TPC	0.229	tn/cm
MTC	0.104	tn·m/cm

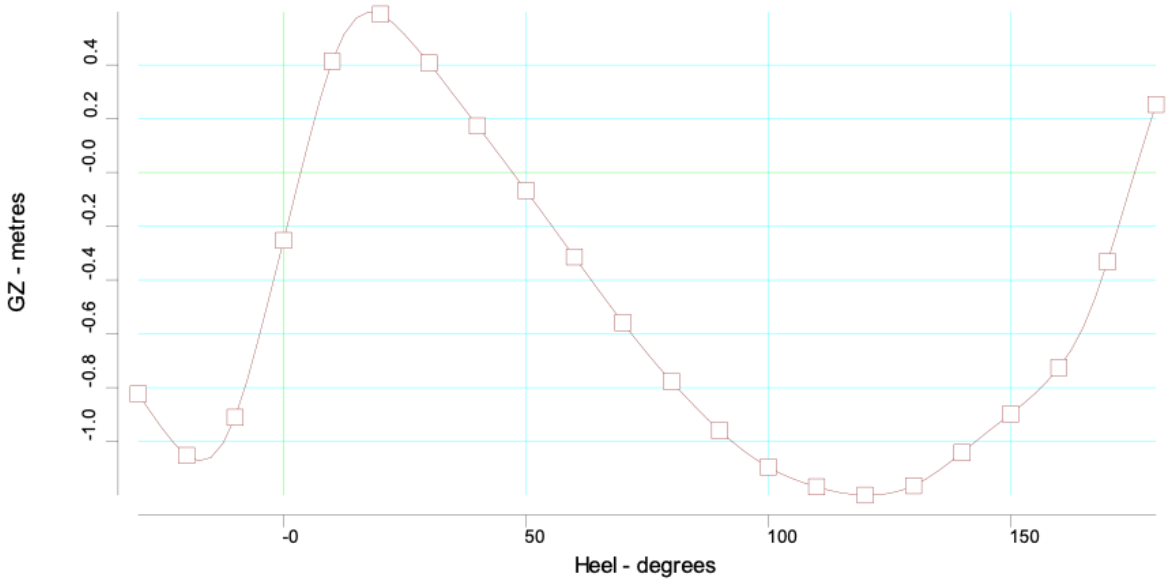

IMO A167 Intact Stability criteria			
#	Criterion	Actual Value	Required Value
1	Area under GZ curve up to 30º> 0.055	0.222	0.055
2	Area under GZ curve from 30º to 40º or downflood > 0.03	0.06	0.030
3	Area under GZ curve up to 40º or downflood > 0.09	0.282	0.090
4	Maximum GZ to be at least 0.20 m at 30º above	0.625	0.200
5	Maximum GZ to be at an angle > 25º	17.537	25.000
6	Initial GM to be at least 0.15 m	3.993	0.150

Appendix II, GA of MEV I demo

GA of MEV I demo

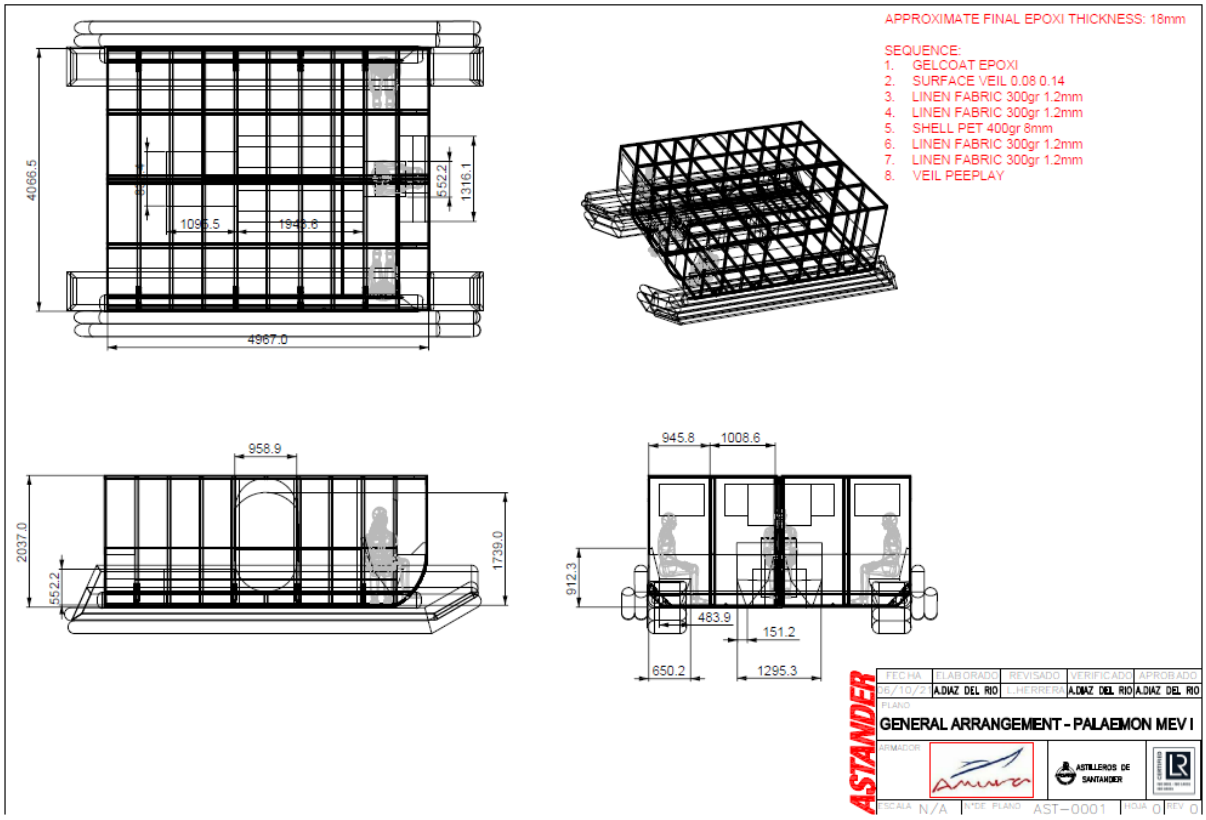

Top and ISO view

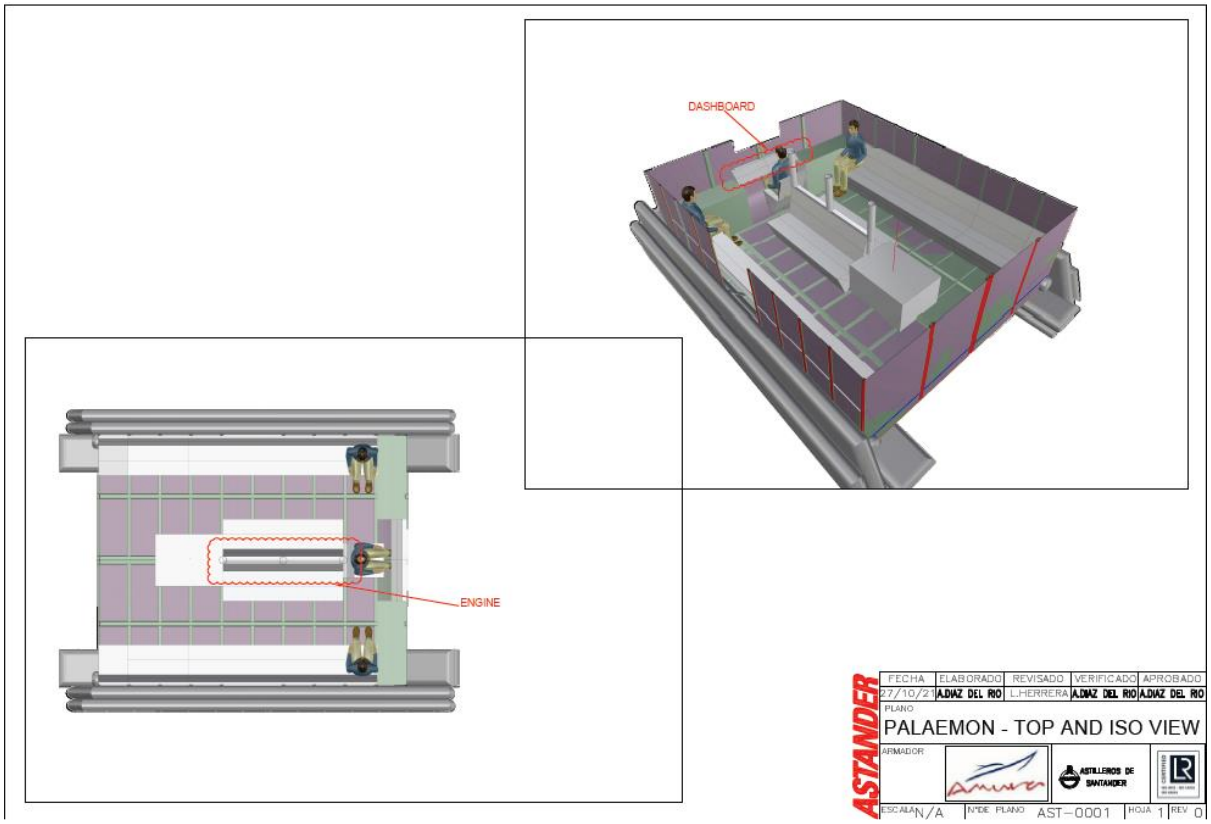
DASHBOARD
ENGINE
ASTANDER
FECHA
ELABORADO
REVISADO
VERIFICADO
APROBADO
27/10/21
A.DIAZ DEL RIO
L.HERRERA
A.DIAZ DEL RIO
A.DIAZ DEL RIO
PLANO
PALAEMON - TOP AND ISO VIEW
ARMADOR
ASTILLEROS DE SANTANDER
ESCALA N/A
Nº DE PLANO AST-0001
HOJA 1
REV 0