WORKING DOCUMENT

Introducing advanced ICT and Mass Evacuation Vessel design to ship evacuation and rescue systems

PALAEMON MASS EVACUATION VESSEL

D6.1 Ship Structural Monitoring Ecosystem

A holistic passenger ship evacuation and rescue ecosystem
MG-2-2-2018
Marine Accident Response

Document Information

Grant Agreement Number	814962	Acronym	PALAEMON
Full Title	A holistic passenger ship evacuation and rescue ecosystem		
Topic	MG-2-2-2018: Marine Accident Response		
Funding scheme	RIA - Research and Innovation action		
Start Date	1st JUNE 2019	**Duration**	36 months
Project URL	EU		
EU Project Officer	Georgios CHARALAMPOUS		
Project Coordinator	AIRBUS DEFENCE AND SPACE SAS		
Deliverable	D6.1 Ship Structural Monitoring Ecosystem		
Work Package	WP6 – PALAEMON Back-End Infrastructure		
Date of Delivery	**Contractual** M32	**Actual**	M33
Nature	R - Report	**Dissemination Level**	PU-PUBLIC
Lead Beneficiary	ENGITEC Systems International		
Responsible Author	Elias Chatzidouros	Email	ech@esi-ltd.eu
		Phone	
Reviewer(s):	David Gómez (ATOS),		
Keywords	Motions sensors, accelerometers, acoustic emission, stability, hull girder strength		

Authors List

Name	Organization
Elias Chatzidouros	ESI

Revision History

Version	Date	Responsible	Description/Remarks/Reason for changes
0.1	2021/11/28	E.Chatzidouros	First draft
0.2	2021/12/20	E.Chatzidouros	Assessment of SHM data from measurements
0.3	2022/01/25	E.Chatzidouros	Final draft
0.4	2022/02/08	ATOS	Internal review
0.5	2022/02/09	E. Chatzidouros	New iteration from internal reviewers' feedback
0.6	2022/11/30	E. Chatzidouros	Testing/interfacing of SHM with PALAEMON core
1.0	2022/12/28	E. Chatzidouros	The final version (submitted to EC portal)

1. Contents

List of Figures

Abbreviations

6DoF	6 Degrees of Freedom
AE	Acoustic Emission
IMU	Inertia measuring Unit
MEV	Massive Evacuation Vessel
NDE	Non-Destructive Evaluation
SHM	Ship's Health Monitoring

Summary

This deliverable presents the SHM (Ship Health Monitoring) condition monitoring system, consisting of two separate (sub) systems. Whereas one of them aims to assess quasistatic and dynamic stability and ship's global structural integrity, the second one monitor's local structural integrity. The first one is IMUs (Inertia Measuring Units) coupled with the SHM software. This scheme allows for monitoring real-time parameters regarding stability and seakeeping, such as angles, accelerations, etc. It also offers real-time data on the deflection of the ship, which can be translated to bending moments and shear forces if data for section modulus is available for the ship (i.e., the so-called Shipboard Legacy Systems). The second system leans on AE (Acoustic Emission) sensors and relevant software which has been calibrated to work on the ship. The AE system sensors are placed in areas that are prone to defect formation or previous calculations have shown that local stresses might induce defect formation and propagationThis is also real-time, which if coupled with the PALEMON Communications Platform and DSS system can offer early warning of a defect, the fault being formed so mitigation actions can be performed. The two systems combined offer a holistic approach to Ship's Real-time condition monitoring. The SHM is connected with the PALAEMON core (DSS) through a communication with the DSS using kafka. In this sense, the systems sends status report at predefined time intervals and an alarm If a specific set of variables exceed a limit value.

1. Introduction

PALAEMON aims to address the increased need for advanced passenger ship evacuation methodologies, by defining a new ICT framework and radical rethink of mass evacuation systems, alongside the introduction of Massive Evacuation Vessels (MEVs), with a wider scope than a sole technical proposition.

The PALAEMON project proposition is two-fold. On the one hand, the introduction of a new evacuation vessel with a large passenger capacity; furthermore, ICT solutions for aiding in the evacuation of the passengers. Both solutions target high passenger capacity passengers and Cruise ships.

Structural Health Monitoring is used in many applications, such as bridges, aerospace and composite material structures, etc. These systems allow the user/operator of the structure/equipment to always be aware of it's state regarding structural integrity. This fact also allows the user to be proactive in terms of maintenance and failure avoidance but also in the case of a failure to have real time data of the state of the equipment/structure which in turn offers informed decision making. The SHM developed in PALAEMON, offers three things local and global structural integrity but also real time data regarding stability.

In this deliverable, the work associated with the development of a novel Ship Health Monitoring (SHM) system for monitoring real-time stability and global structural integrity of the Ship, as well as integration of AE (acoustic emission) system on the structure of the ships to monitor, detect the onset and propagation of defects/damages. In this sense, in this deliverable the following sections are included:

- General description of the SHM systems
- Description of the IMU (Inertia Measurement Units) sensors
- Hardware design
- SHM software development and design
- Preliminary testing of SHM system
- AE system description
- AE application on the SHIP
- SHM as part of the PALAEMON Communications Platform
- Conclusions

2. SHM system

2.1. SHM hardware

2.1.1. Description

In the scope of this task, a fully-fledged SHM system was developed, to monitor, in real-time, the hull integrity of a Ship, i.e., the passenger ship used as a test case in the PALAEMON project. This system is composed of IMUs (Inertial Measurement Units) and the subsequent software development, responsible for translating the signals from the sensors into useful data which will be further used for the rest of the components in the PALAEMON system.

Technically speaking, the motion sensors are reliable 6DoF (six degrees of freedom) sensors integrating 3 axis, accelerometers, magnetometers and gyroscopes. They measure accelerations in 3 axes and angular velocities around these three axes[1]. Furthermore, these sensors have the ability to measure roll, pitch, and yaw, and combined with developed

[1] https://www.researchgate.net/figure/Six-degrees-of-freedom-ship-motions_fig1_262046990

software they can calculate deflection and torsion of the hull. Depending on the desired functions, the system has the possibility to monitor one or more sensors. In this case, the SHM system was developed with 4 motion sensors which will be eventually evenly placed on the deck of the ship, throughout its length (as shown in Figure 1). These sensors were connected with a laptop that will operate as a processing node and communication relay with the PALAEMON system core, used in setup described in section 2.4. The sensor has an RS-485-connector interface that can communicate with it for up to 200m of the cable line. The RS-485 cable line, after the necessary connections (described in section 3.1.3) is connected to the PC which has installed the SHM software. The possibility of a radio transmitter is also available and makes it easy to have wireless communication with the sensor, although not used in this current setup. All signals from the motion sensors were recorded into the laptop (described in section 3.1.3) and relevant variables, such as accelerations, angles and deflection were displayed-real time on the laptop, with the aid of the SHM software. The differences between the sensors, in terms of angels and displacements, show any occurring deflection and/or torsion during the evacuation process and the recorded information is used in the DSS, while also providing clear information about the actual condition of the ship, both in terms of stability (heel and trim) and longitudinal deflections. The reader might refer to D6.4 (PALAEMON On-Board Decision Support System) to get acquainted with the main features carry out by this component. As a side note, the motion sensors do not require a separate power supply, so they can take the energy from their RS-485 connections.

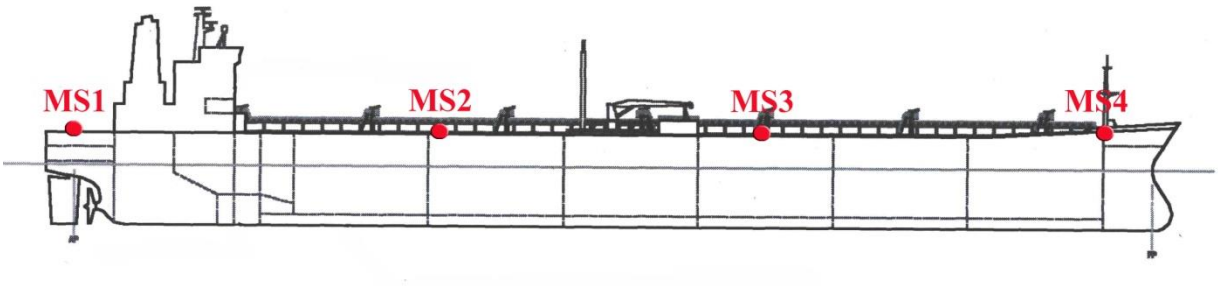

Figure 1 Illustration of placement of IMUs (Motion Sensors) onboard a (generic) Tanker

2.1.2. IMUs

The IMUs are the commercial Ellipse Series from SBG[2] (Figure 2). These IMUs are industrial-grade inertial sensors. They have 3 axis gyroscopes, 3 axis accelerometers as well as 3 axis magnetometers. They are vibration-resistant, waterproof, and can operate faultlessly between temperatures from -45 to 85^0 C. They offer real-time measurement 6 of translations/angles, velocities, and accelerations. For angles, the accuracy is 0.1^0 degrees and for heave 5cm.

[2] SBG Systems Ellipse Series webpage - https://www.sbg-systems.com/products/ellipse-series/

Figure 2 Ellipse Series IMU. Source: SBG Systems Webpage

2.1.3. Hardware design

The SHM system is built to be able to gather data simultaneously from several sensors. By interrogating sensors it can also combine the recorded data for on-the-fly post-processing. In this sense the sensor communication system was built, is to be able to meet the following needs:

- The processing of data from multiple sensors simultaneously
- The reading of sensor data from distances up to 100m

For these needs the following materials were implemented:

- Central system for communication with the software
- Sensor system for connection to the central system

In Figure 3 we can see the structure of the central sensor system:

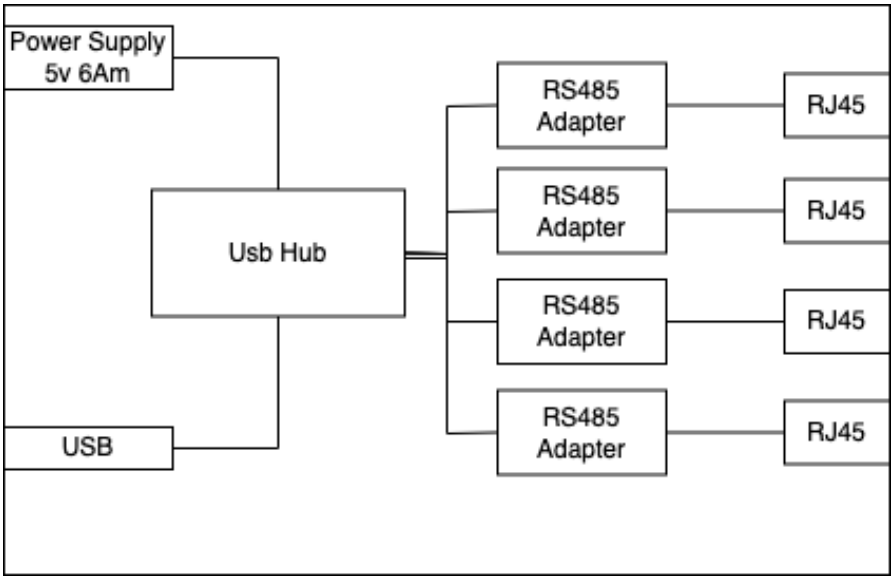

Figure 3 Central Sensor System

The structure of the sensor system can be seen in Figure 4:

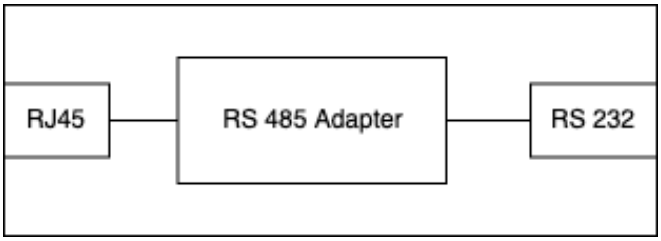

Figure 4 Structure of the sensor system

In the above diagram, as we can see, the serial port of each sensor is converted to RS485 so that the need for communication at distances up to 100m can be met. Also, for the connection of each sensor with the central system the connection has been implemented through the RJ45 port. In Figure 5 we can see this connection:

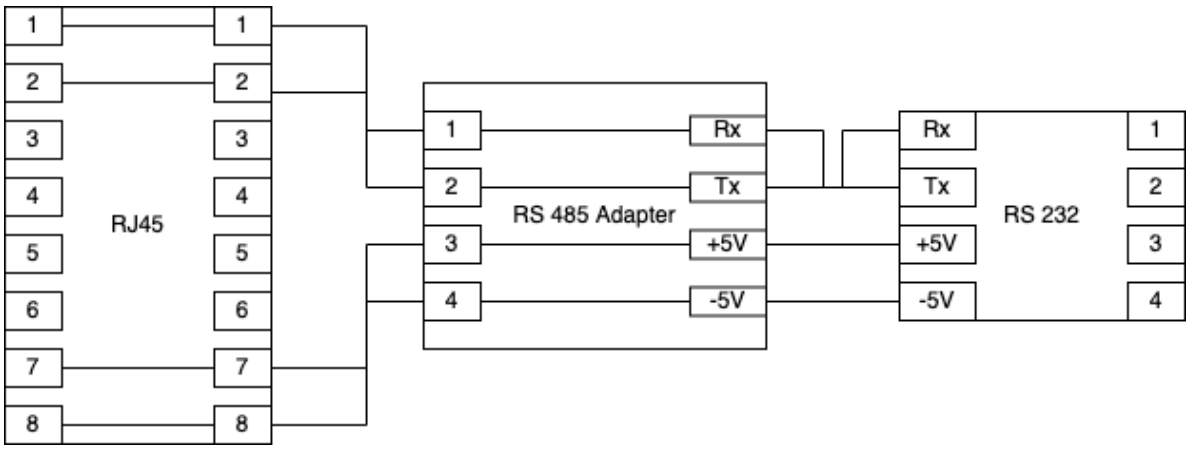

Figure 5 Connection of Sensors with central system

In Figure 6 we can see the overall structure of the project system:

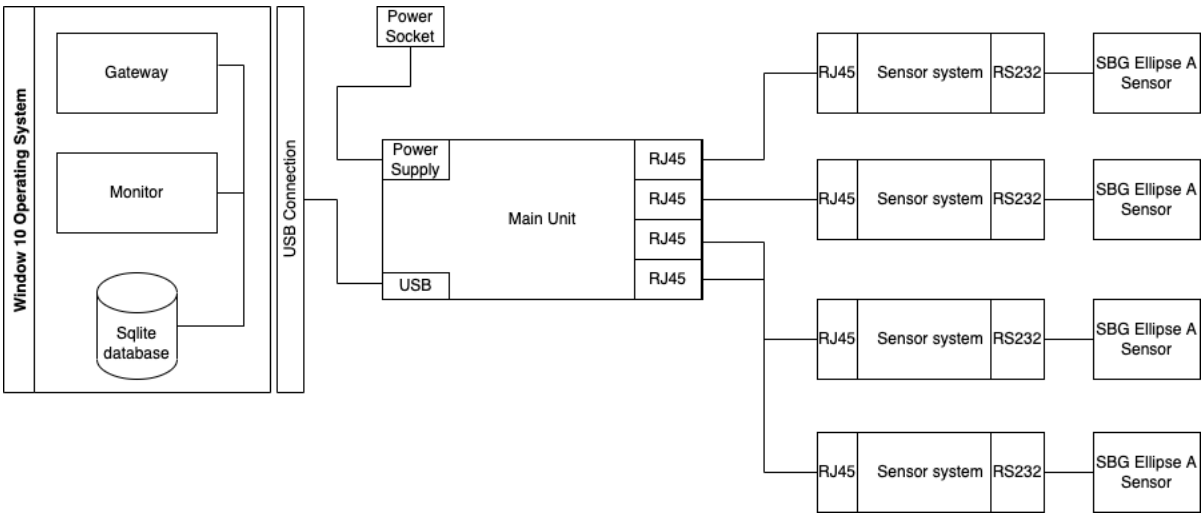

Figure 6 Structure of the whole system

2.2. SHM software.

For monitoring stability and global structural strength of a ship, the aforementioned motion sensors have been paired with the SHM software, developed by ESI. The purpose of the SHM software is to record, in real-time, angles for the ship, accelerations, and displacements. In this sense, the angles and accelerations offer information about the quasistatic and dynamic stability of the ship, as well as its deflection. Furthermore, the SHM software can evaluate bending moments and shear forces if the section modulus of the ship is known.

The accurate description of the implementation, the code is presented, which mainly concerns the basic functions of the implementation in the form of diagrams based on the UML 2.0 language.

2.2.1. SHM Gateway

As mentioned above the main function of this implementation is to read and record sensor data in real-time. The data collected for each sensor is stored in a single .txt file and relates to the following data:

- Accelerometer x, y, z (m.s^2)
- Roll, Pitch, Yaw angles (rad to degrees)
- Heave velocity
- Heave ship acceleration (m.s^2)
- Heave ship motion (meters)

The data has been grouped into these 3 main datasets:

Table 1 Caption TBD

Dataset ID	Value 1	Value 2	Value3
#1	Accelerometer x	Accelerometer y	Accelerometer z

#2	Roll	Pitch	Yaw
#3	Heave velocity	Heave ship acceleration	Heave ship motion

The structure of the file in which they are stored can be seen in Figure 7:

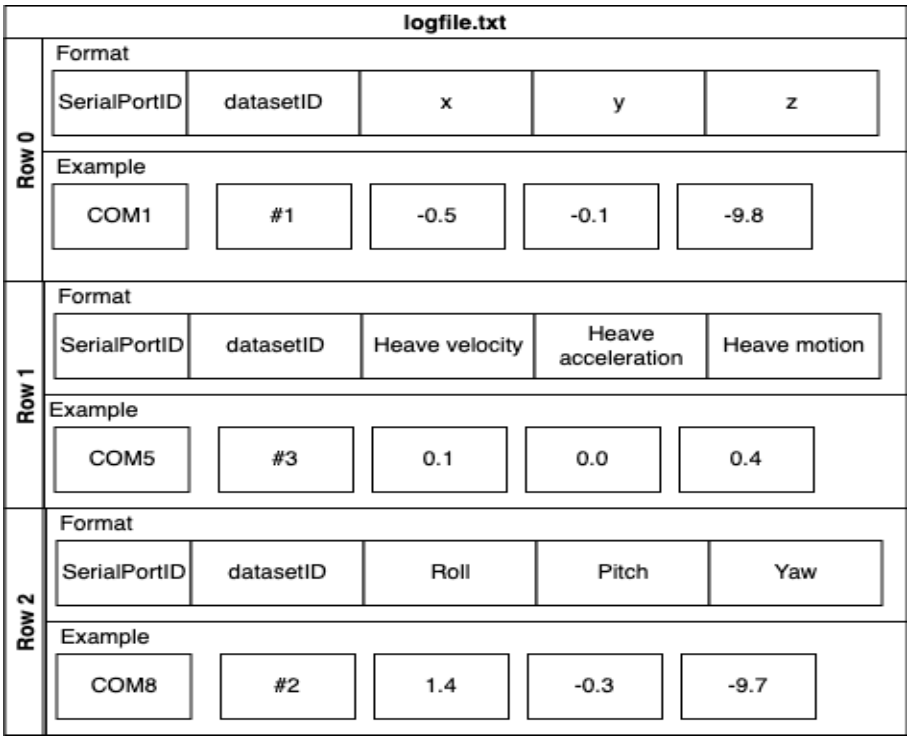

Figure 7 File output structure

In the following static class diagram (Figure 8) we can see this implementation:

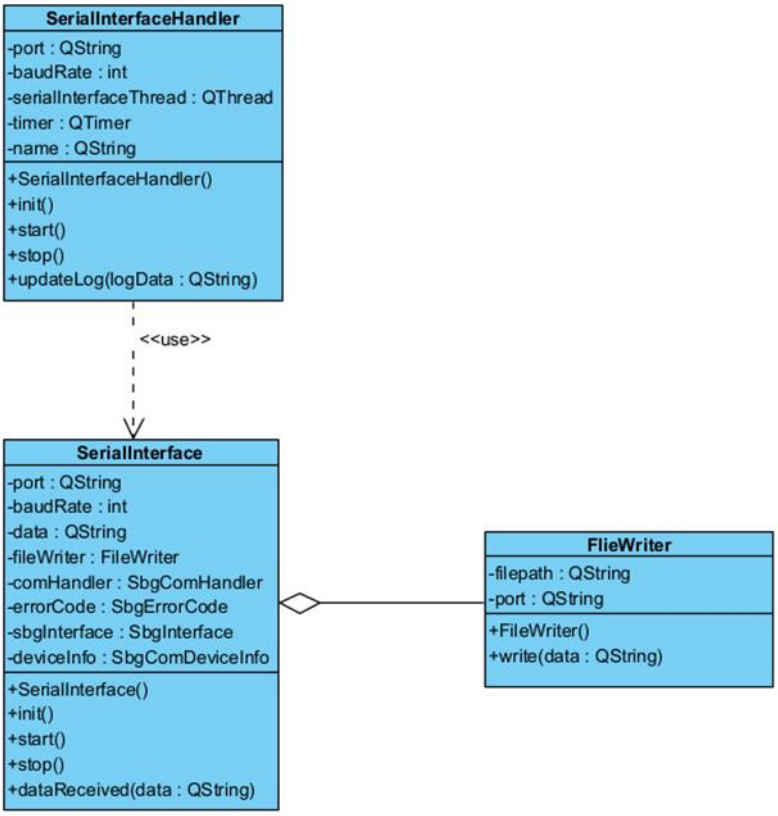

Figure 8 Implementation diagram

As we can see in Figure 9, for each serial port to which a sensor corresponds, an independent thread is created which writes the data to the hard disk. In the following sequence diagram we can see this interaction:

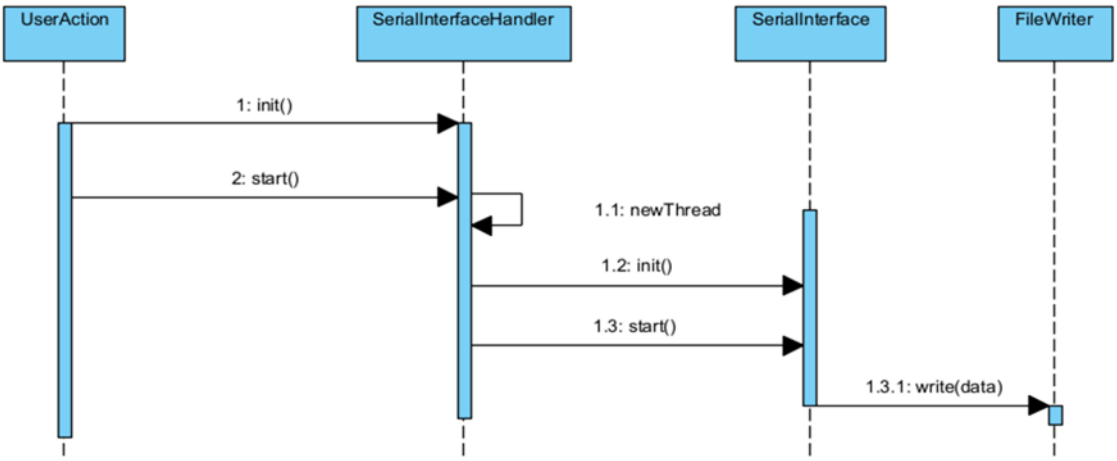

Figure 9 Sequence diagram

A Graphical User Interface (GUI), presented in Section 2.3, was implemented in order for the user to be able to manage the sensors he/she has connected in an easy way. In the following static class diagram we can see this implementation:

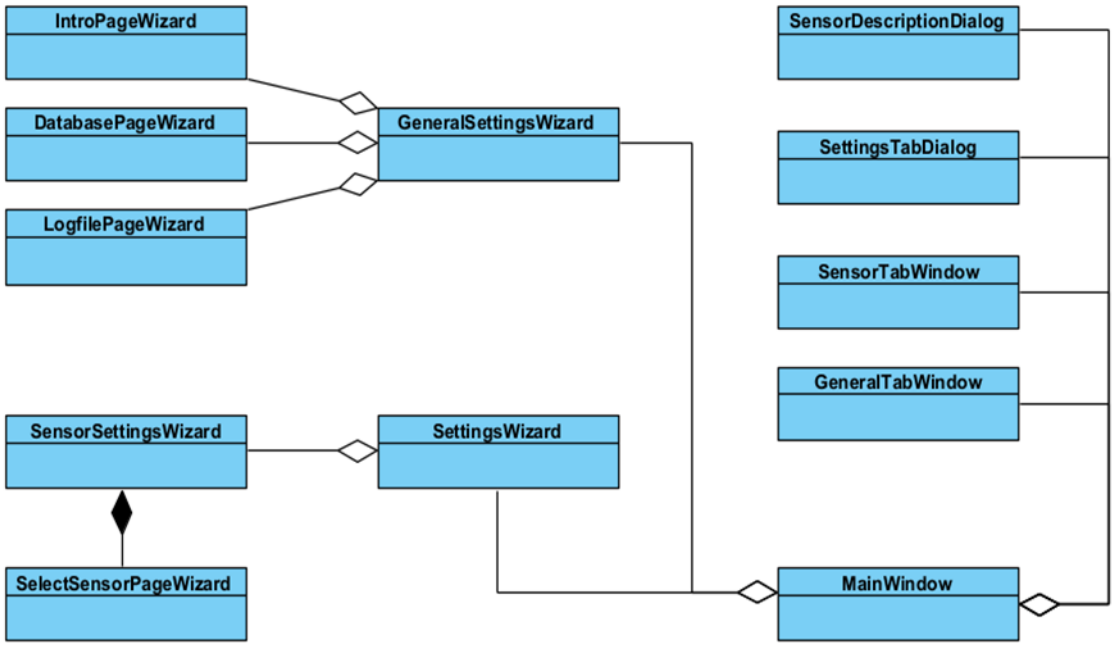

Figure 10 Static diagram for management of sensors

2.2.2. SHM Monitor

The main function of this implementation is to read the sensor data and graphically display it. Also informing the control center about possible "critical" data values that may arise during the sensor monitoring. In Figure 11 we can see this implementation:

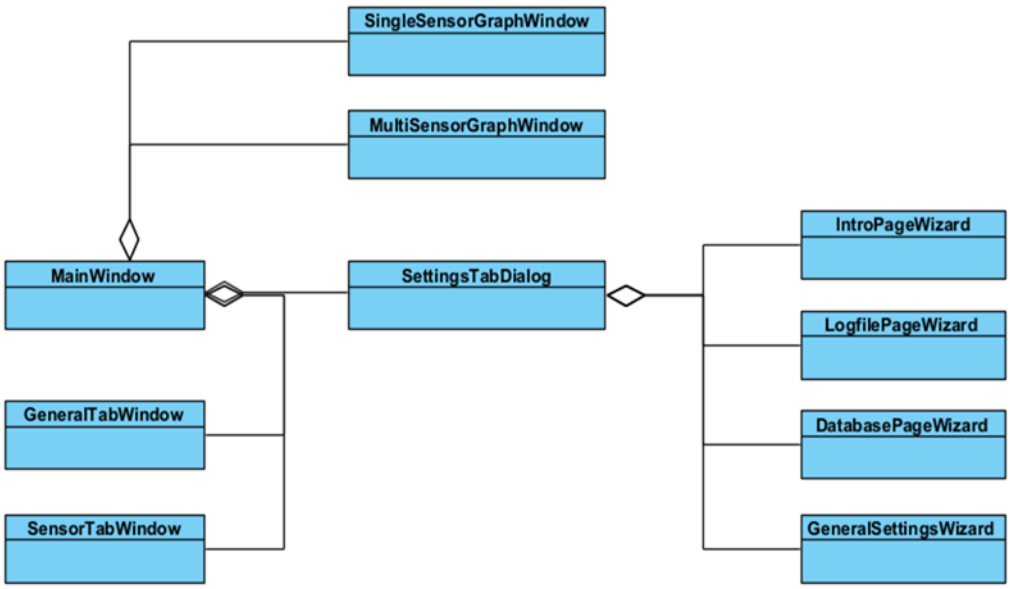

Figure 11 SHM monitoring

2.2.3. Database

The database is based on the popular SQLite 3.0 library[3]; the purpose of this implementation is to locally store information about system sensors as well as to share this data between system implementations. In the following static diagram (Figure 12) we can see this implementation:

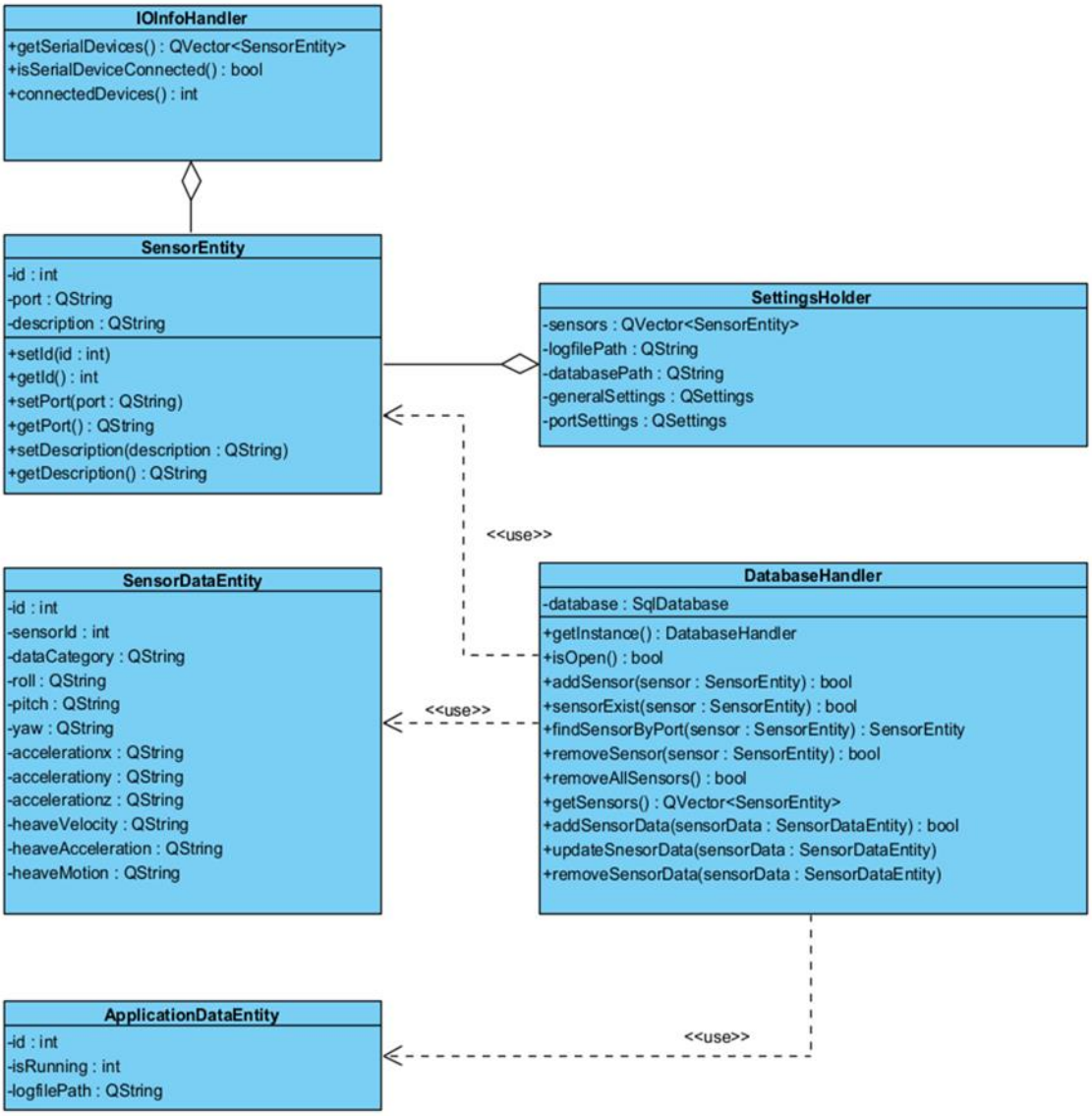

Figure 12 Database diagram

The database schema, as well as the information stored, can be seen in Figure 13:

[3] https://sqlite.org/index.html

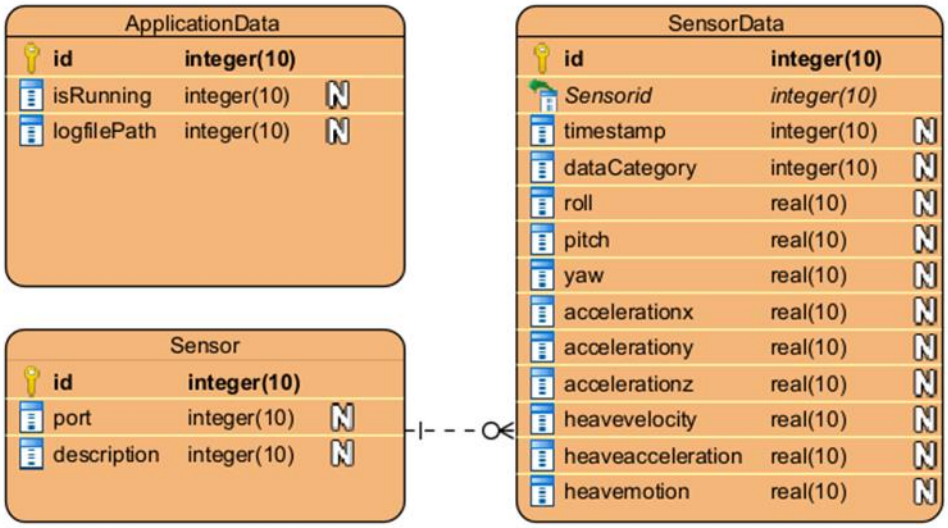

Figure 13 Database schema

2.3. SHM GUI

The SHM offers real-time information on angles, roll, pitch, and yaw (Figure 14), as well as heave. Heave is also translated to vertical displacement relative to the motion of the ship. When the vertical displacements from all the sensors are combined, the deflection of the ship can be calculated, accounting for the relative movement of the ship in waves. All this is displayed at the developed GUI (Graphical User interface) of the SHM system. In the GUI, the section modulus of the ship can be inserted and the bending moments of the ship can be evaluated.

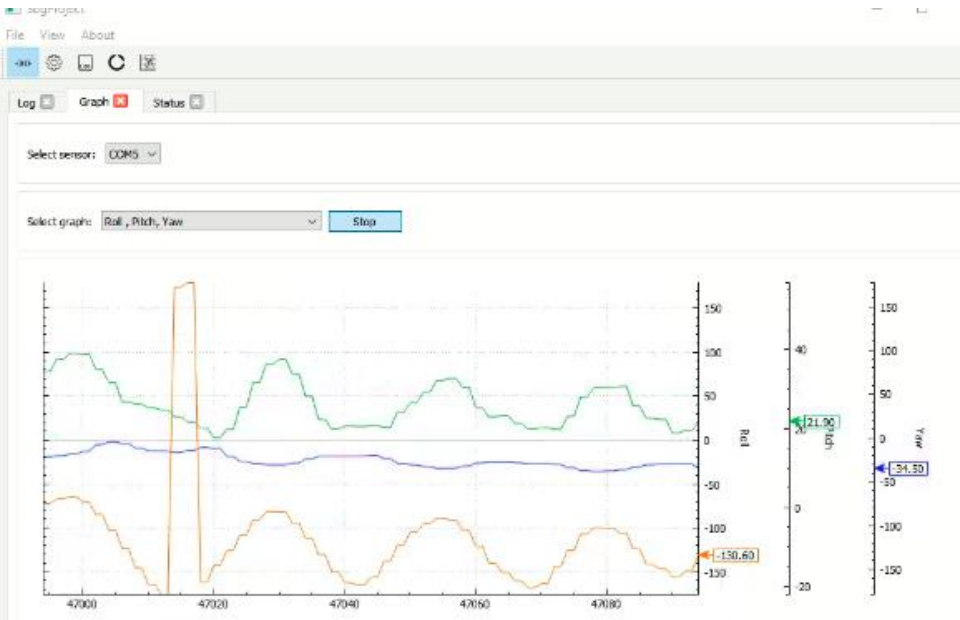

Figure 14 SHM GUI displaying angles of the ship in a dummy test

2.4. SHM system preliminary tests

A preliminary test was accomplished in June 2021 in the port of Piraeus, onboard a tug boat (Figure 15). The validation of the SHM software and the hardware set up performed faultlessly. A preliminary testing on board a ship selected as a test bed in the PALAEMON project was not feasible, due to logistics but most importantly due to the restrictions imposed in the previous year due to the COVID pandemic.

The initial condition (angles) was checked against the draught of the ship, at aft midship and front. Measurements were taken some time in the middle of the testing and the end. The angles that were displayed in the SHM GUI, were in complete agreement with the measurements.

Figure 15 Photos from testing at the Port of Piraeus. Top left: Laptop connected to IMU; Top right: IMU attached to the main deck of the ship; Bottom left: System Setup and Connection; Bottom Right: View from the ship

3. Acoustic emission

Acoustic emissions (AEs) are the stress waves produced by the sudden internal stress redistribution of a material caused by the changes in the internal structure. Possible causes of the internal-structure changes are crack initiation and growth, crack opening and closure, dislocation movement, twinning, and phase transformation in monolithic materials and fiber breakage and fiber-matrix debonding in composites. Most of the sources of AEs are damage-related; thus, the detection and monitoring of these emissions are commonly used to predict material failure.

Besides the applications of AE in research, AE has been widely used in industries, including the detection of faults or leakage in pressure vessels, tanks, and piping systems. AE is also used to monitor the welding and corrosion progress.

The difference between the AE technique and other Non-Destructive Evaluation (NDE) methods is that AE detects the activities inside a material, while other NDE methods attempt to examine the internal structures of it. Furthermore, AE only needs the input of one or more relatively small sensors on the surface of the structure or specimen being examined so that the structure of the specimen can be subjected to the in-service or laboratory operation while the AE system continuously monitors the progressive damage. Other NDE methods, such as ultrasound and x-ray, have to access the whole structure or specimen, and therefore, the structure of the specimen often needs to be disassembled and taken to the laboratory to be examined.

The disadvantage of AE is that commercial AE systems can only estimate qualitatively how much damage exists in the material and approximately how long the components will last. So, other NDE methods are still needed to do more thorough examinations and provide quantitative results. Moreover, service environments are generally very noisy, and the AE signals are usually very weak. Thus, signal discrimination and noise reduction are very difficult, yet extremely important for successful AE applications.

AE is capable of indicating directly the crack initiation point during the loading of a specimen. For exploiting this potential of AE, several investigators[4,5,6,7,8] have carried out conventional fracture toughness tests in liaison with the AE technique; but so far, no generalized guideline has emerged out of this type of ‘combined’ experiment. But almost each of these has different approaches. The aforementioned research does not provide any recommendation towards a guideline for detecting the point of crack initiation using AE signals generated during fracture toughness tests.

3.1. AE system signals

The AE signals, i.e., stress waves produced by sudden movements in the microstructure of a deformed material, radiate out into the structure and excite a piezoelectric transducer. As the

[4] M. Arii, H. Kashiwaya, T. Yanuki, Slow crack growth and acoustic emission characteristics in COD test, Engineering Fracture Mechanics, 7 (1975) 551-552,IN523-IN524,553-556
[5] Y. Blanchette, J.I. Dickson, M.N. Bassim, Detection of general yielding in a516 steel by acoustic emission, Engineering Fracture Mechanics, 17 (1983) 227-234
[6] C.S. Camerini, J.M.A. Rebello, S.D. Soares, Relationship between acoustic emission and CTOD testing for a structural steel, NDT and E International, 25 (1992) 127-133
[7] G. Clark, J.F. Knott, ACOUSTIC EMISSION AND DUCTILE CRACK GROWTH IN PRESSURE-VESSEL STEELS, Met Sci, 11 (1977) 531-536
[8] M.A. Khan, T. Shoji, H. Takahashi, ACOUSTIC EMISSION FROM CLEAVAGE MICROCRACKING IN ALLOY STEELS, Metal science, 16 (1982) 118-126

stress in the material is raised, many of these emissions are generated. The signals from one or more sensors are amplified and measured to produce data for display and interpretation. The classic sources of acoustic emissions are defect-related deformation processes such as crack growth and propagation. The process of generation and detection is illustrated in Figure 16.

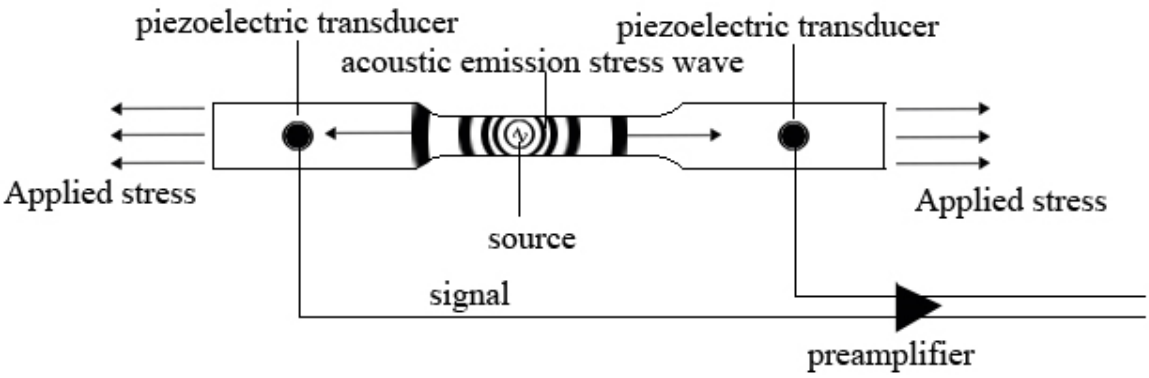

Figure 16 Basic principle of acoustic emission.

In order to record AE signals, three basic features are required. The piezoelectric transducers (Figure 17) are in contact with the tested material and record the AE signals, the preamplifiers that amplify the signal, and an AE data acquisition and digital signal processing system with an AE post-processing software. The AE system and software monitor and process, in real-time, the AE waveform and produces AE characteristic features, such as AE duration, AE amplitude, Rise time, AE counts, etc. (Figure 18).

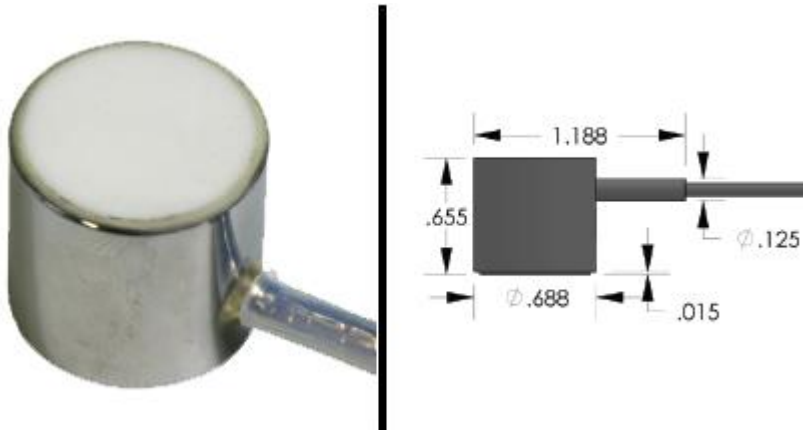

Figure 17 Piezoelectric transducer[9]

[9] AEwin manual

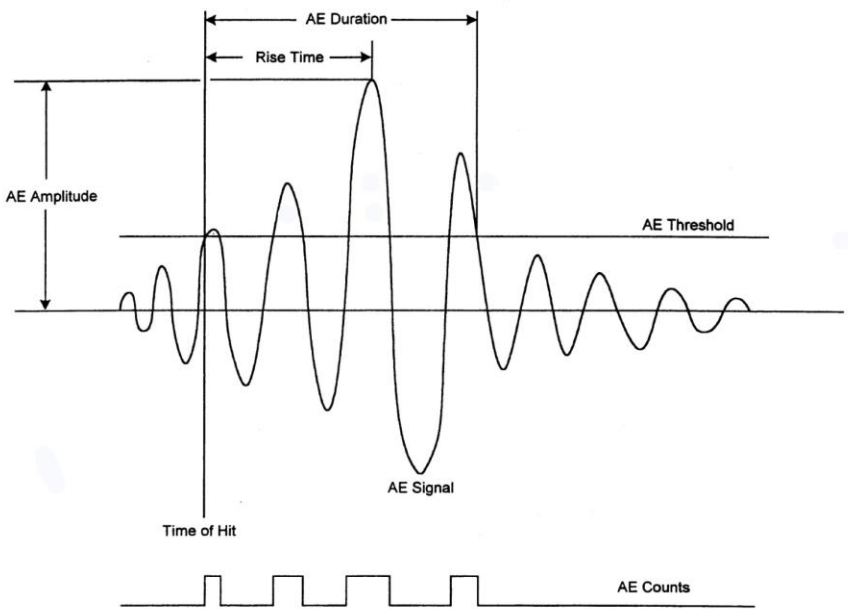

Figure 18 AE hit feature extraction diagram[10]

A representation of a typical AE signal is illustrated in Figure 18, along with various characteristic hit-based measurements that are recorded during an AE test. The AE threshold is the noise (dB) level that is set at the start of the AE measurement, below which all AE signals are not recorded. This feature allows excluding external noise not directly involved with the experiment or signals which are not desirable to be recorded. The AE Hit based signals which are indicators of a defect/crack forming and propagating are:

Counts:

(also referred to as AE Threshold Crossing Counts). This AE Hit feature simply counts the AE signal excursions over the AE Threshold. In Figure 18, the example shows that 4 AE counts have been generated.

Absolute Energy:

Absolute Energy is a 6-byte value whose units are aJ (or attoJoules, with 1 aJ = 1.0X10-18 Joules). This feature is a true energy measure of the AE hit. Absolute energy is derived from the integral of the squared voltage signal divided by the reference resistance (10k-ohm) over the duration of the AE waveform packet. The range is from 0.000931 aJ to 1310.25 nJ. Resolution is 0.000931aJ per count (at 1 MHz or greater sample rate). This feature is available in both the Hit and the Time-Driven data sets. As a hit feature, it reports the true energy of the AE hit. As a time-based feature, it reports the energy in the time-driven data rate interval. As a time-driven feature, this is a very good parameter for monitoring continuous signals as it is independent of a hit-based activity.

[10] https://www.researchgate.net/figure/Diagram-of-AE-hit-feature-extraction-PAC-2007_fig1_286677000

These hit-based characteristic features will be used in this work to identify crack initiation and propagation on a ship.

3.2. AE application on the ship

In this project, the commercial AE system of Physical Acoustics, MicroSHM[11] will be used. This is a standalone system with sensors. This device (Figure 19) has to be deployed before starting the monitoring process. It can be set to record all events and features, but also offer alarms when certain characteristic parameters exceed a certain threshold. In our case the AE system is programmed to offer alarms whenever Counts an Absolute Energy exceed a predetermined limiting value. The activity can be monitored in real-time if the system is connected to a laptop with the AE win software. More importantly, it can be programmed, as mentioned earlier, and can only offer alarms when characteristic parameters exceed predetermined values. The rest of the data can be retrieved only when we go and retrieve the system or connect on-site.

Due to the nature of the characteristic parameters Counts and Absolute energy, they will exceed the characteristic value when the defect is forming but also when it propagates.

[11] https://www.physicalacoustics.com/by-product/micro-shm-structural-health-monitoring-system/

Figure 19 AE System from Physical Acoustics (photo)

4. SHM as part of the PALAEMON Communications Platform

The SHM system is designed to communicate with the PALAEMON platform through kafka server. In case of an incident or an emergency situation, which will be triggered by an event, e.g. grounding, collision, excessive rolling, etc., where limit values of variables (roll, pitch, accelerations etc.) are exceeded, an alarm is sent to the PALAEMON platform and continuous data are fed into the platform form the SHM.

In normal operating conditions the SHM generates a status report, at pre-specified time intervals, where all the values variables of interest are reported to the platform. In Figure 20 the dependencies of the SHM dependencies in the PALAEMON architecture is illustrated.

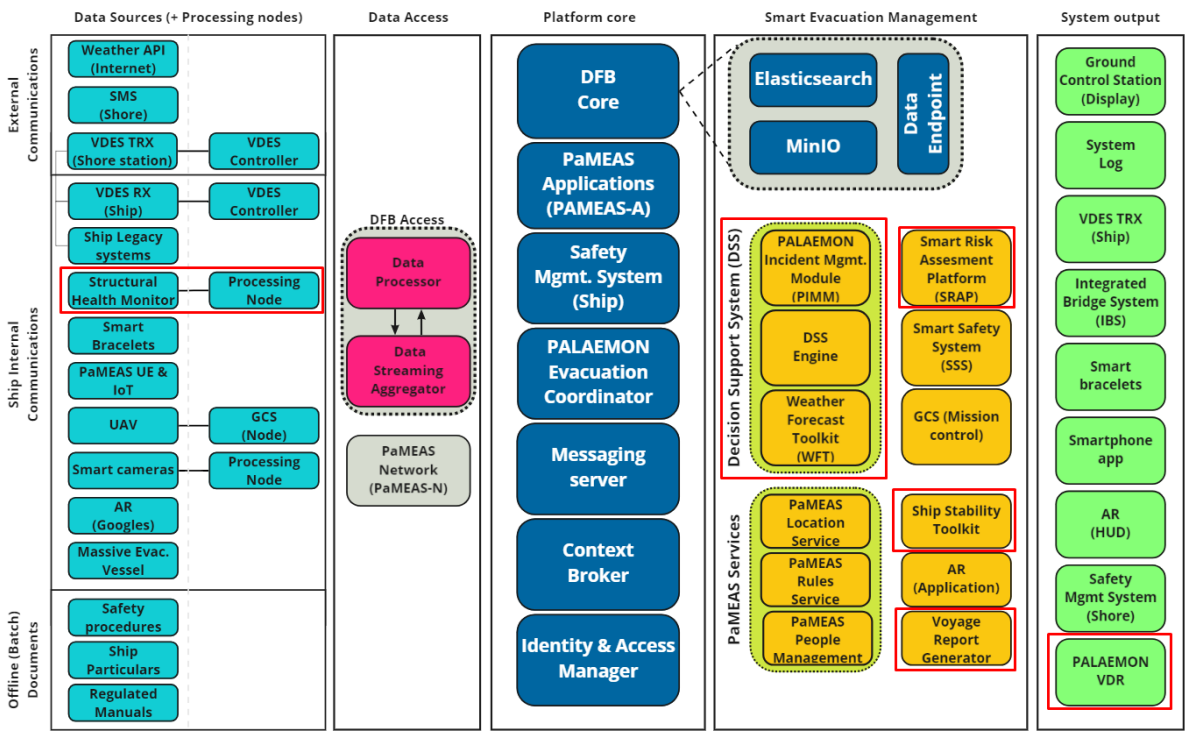

Figure 20. PALAEMON Reference Architecture (v2) and SHM direct dependencies

4.1 SHM as part of the PALAEMON Communications Platform

As part of the trials for integrating the SHM into the PALEMON communications platform, testing has been performed on 30/11/2022.

<u>Message bus details</u>

Message bus: Kafka Broker

Bootstrap servers: dfb.palaemon.itml.gr:30093

Topics:

Topic	Role	Message
evacuation-coordinator	Consumer	Json message
evacuation-component-status	Producer	EvacuationMessage / json
resource-discovery-request	Consumer	Json message
resource-discovery-response	Producer	ResourceMessage / json
heartbeat-request	Consumer	Json message
heartbeat-response	Producer	HeartbeatMessage / json
shm-report	Producer	ShmReportMessage

shm-notification	Producer	ShmAlarmMessage

Interaction between the Shm component & Palaemon Project

The following diagrams present in detail the sequence of actions performed for the above topics:

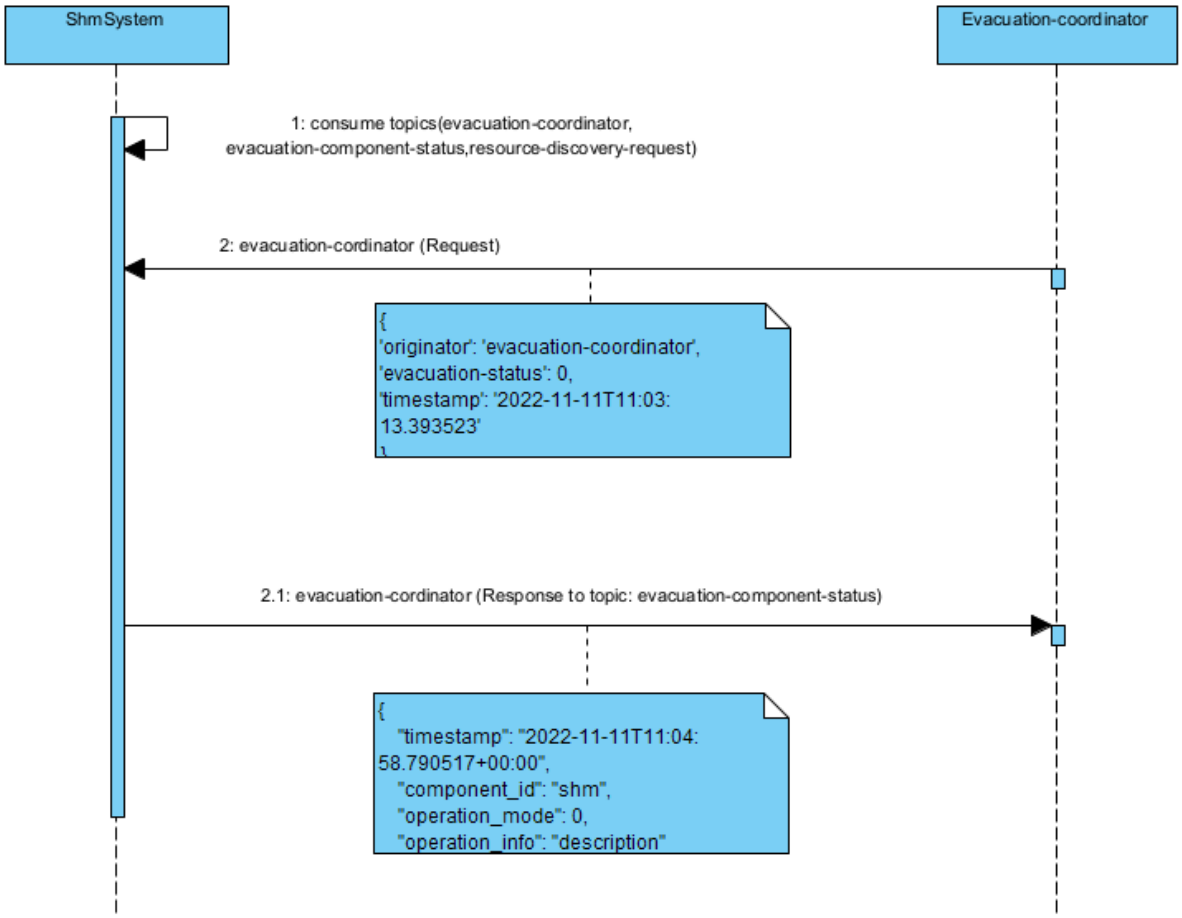

Figure 21:. evacuation-coordinator / evacuation-component-status

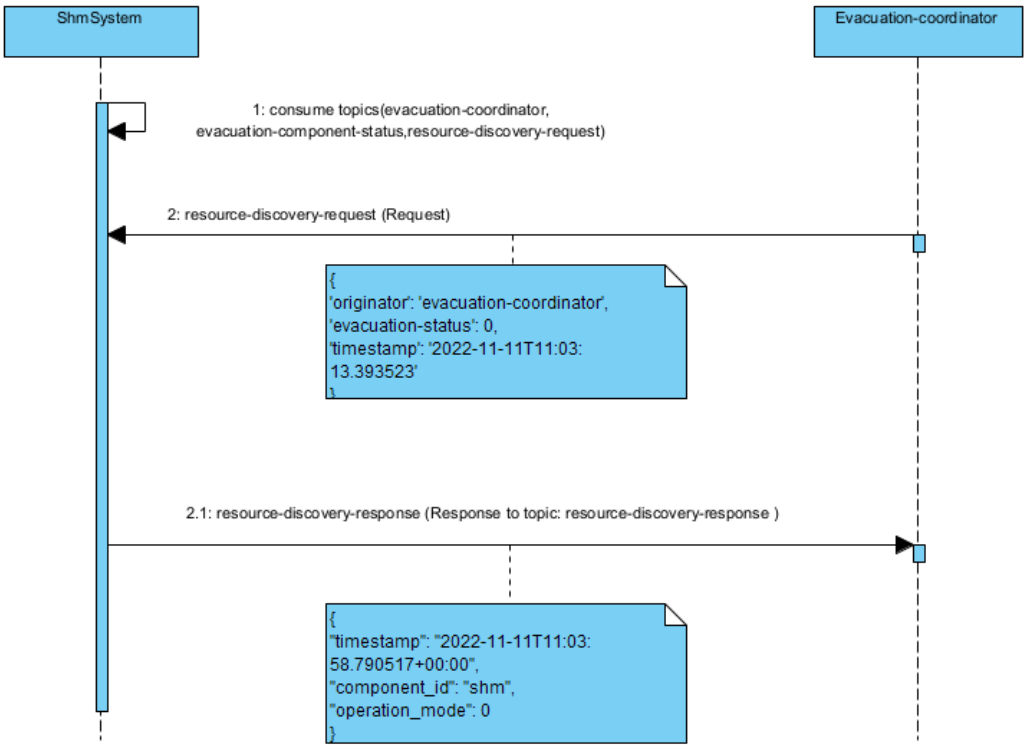

Figure 22:. resource-discovery-request / resource-discovery-response

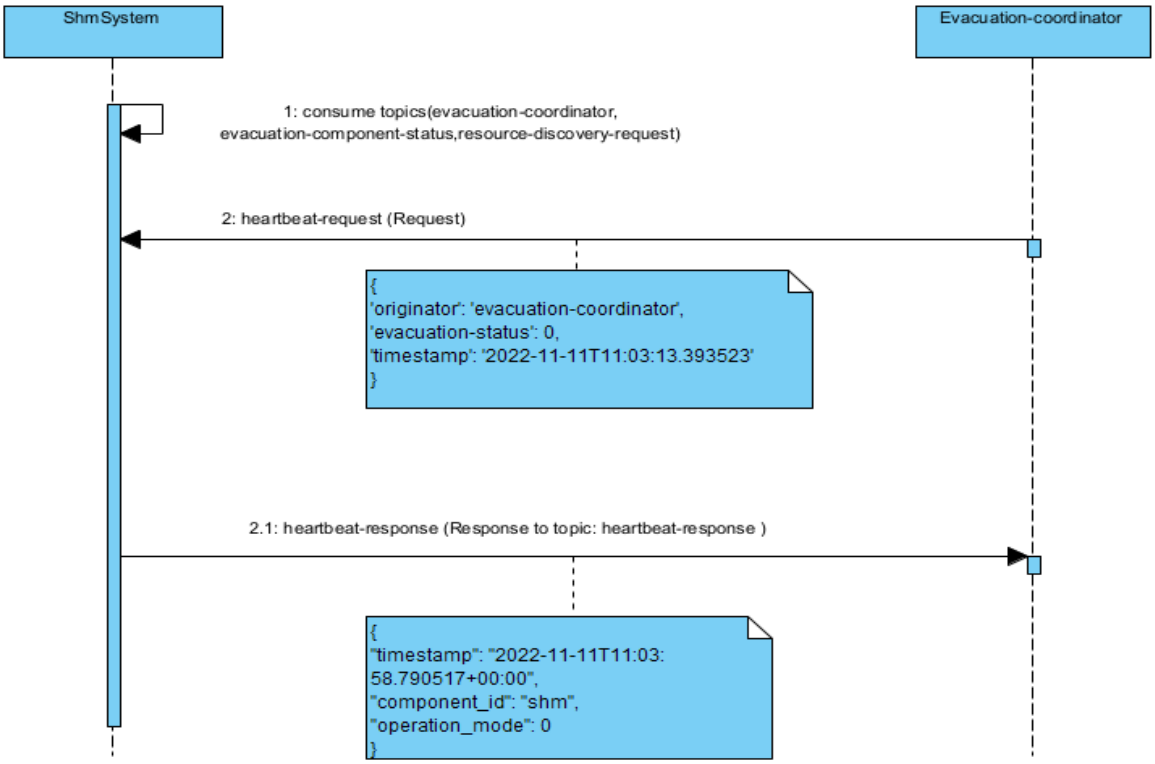

Figure 23:. heartbeat-request / heartbeat-response

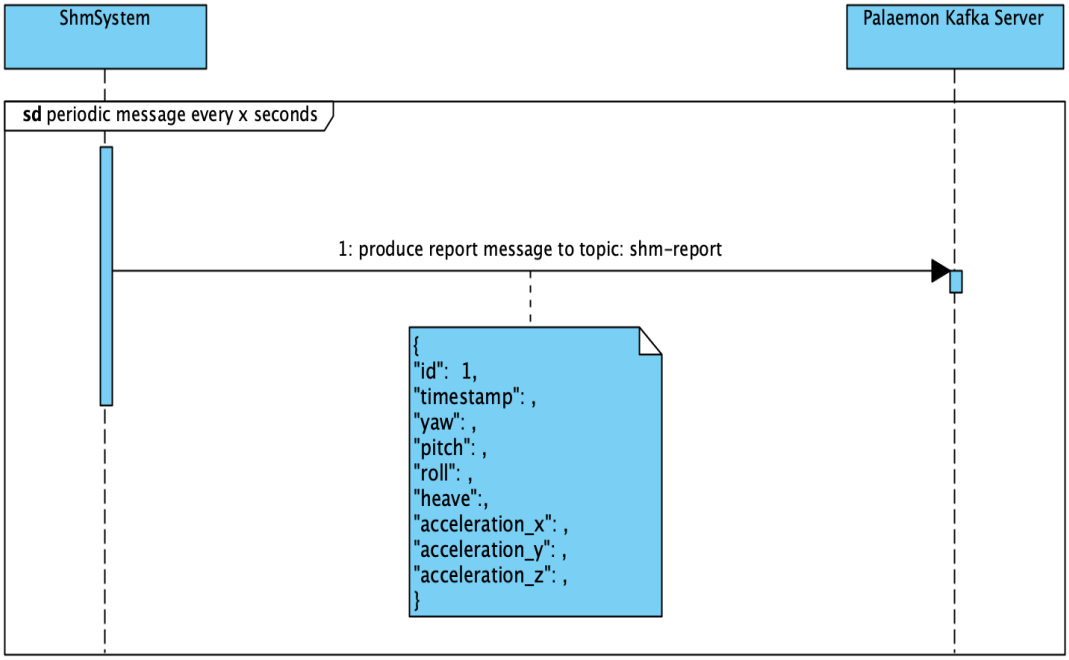

Figure 24:. shm-report

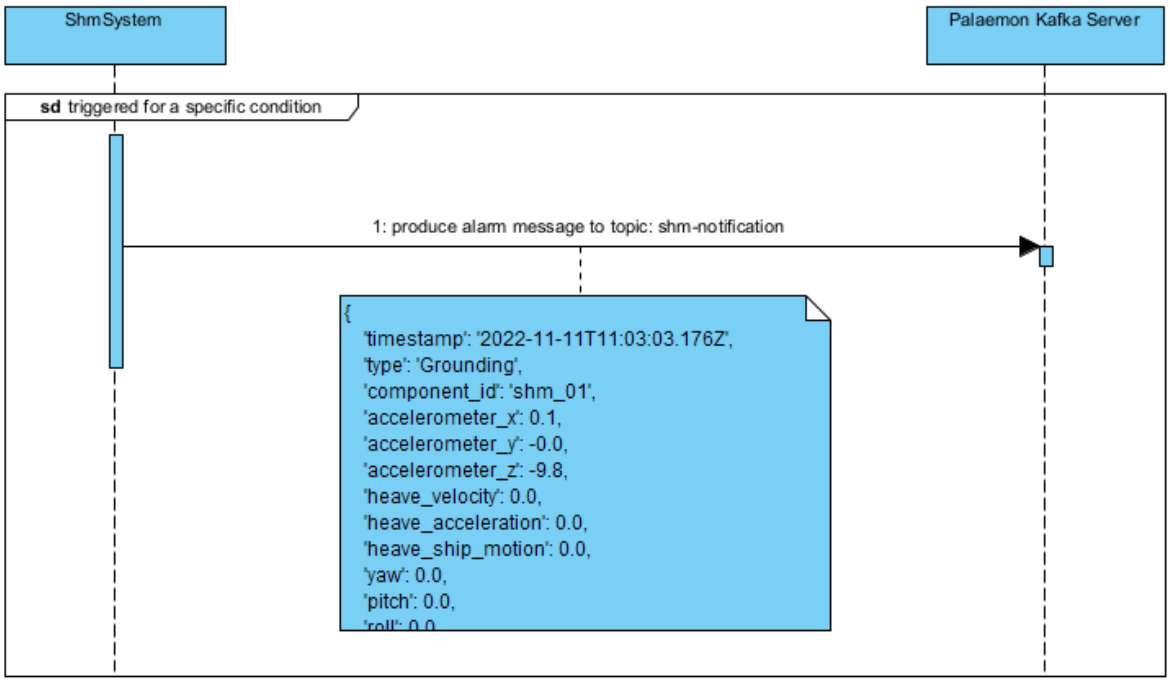

Figure 25:. shm-notification

After the tests on each topic for each different scenario, the results for the integration test between Palaemon Kafka Server and the shm component can be seen in the Figure below:

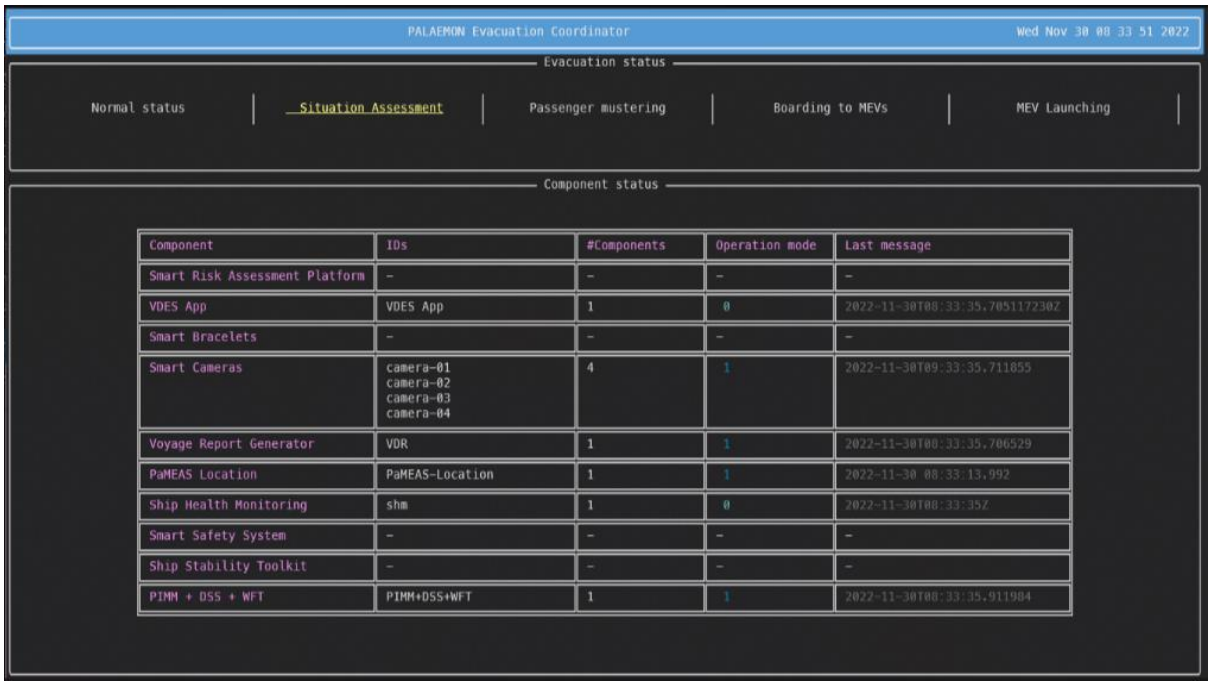

Component	IDs	#Components	Operation mode	Last message
Smart Risk Assessment Platform	-	-	-	-
VDES App	VDES App	1	0	2022-11-30T08:33:35.705117230Z
Smart Bracelets	-	-	-	-
Smart Cameras	camera-01 camera-02 camera-03 camera-04	4	1	2022-11-30T09:33:35.711855
Voyage Report Generator	VDR	1	1	2022-11-30T00:33:35.706529
PaMEAS Location	PaMEAS-Location	1	1	2022-11-30 08:33:13.992
Ship Health Monitoring	shm	1	0	2022-11-30T08:33:35Z
Smart Safety System	-	-	-	-
Ship Stability Toolkit	-	-	-	-
PIMM + DSS + WFT	PIMM+DSS+WFT	1	1	2022-11-30T08:33:35.911984

Figure 26:. Results of Integration tests

5. Conclusions

In this deliverable, the work for the development of the SHM system, as well as the integration of the AE system on board a ship. These systems monitor real-time the global and local structural integrity of the ship and thus can aid DSS to offer swift and informed mitigation actions in case of emergency. The SHM and AE systems are also a part of the ICT solutions that the PALAEMON project develops. These systems are an integral part of the ICT infrastructure since they offer real-time picture of the condition of the ship.

It was shown that the SHM can generate real time data of the ship's response and these data are reported in the PALAEMON platform.

The SHM system was real time tested on board a ship in the Pireaus port, where real time data were recorded during the trial.

Furthermore, the SHM was connected to the PALAEMON core through kafka server and successfully transmitted data (alarms and variables values), whenever there was an incident. It was also successful to transmit status reports in pre-specified intervals, eg. 10 minutes.

Future work involves the graphical representation of Ship's deflection. Integration of Ship's section modulus in the software and measuring bending moments and relating these calculations to boundary conditions (loadings, i.e. waves, ship's damages, etc.). Lastly the SHM software and recorded data will be related with FEM (Finite Element Method) analysis of the ship's response.